ELEXANT 4010i

SINGLE-POINT HEAT-TRACING CONTROLLER

Elexant 4010i-SSR-FW

PRODUCT OVERVIEW

The nVent RAYCHEM Elexant 4010i is a compact, full-featured, touch screen based, single-point heat-tracing controller. It provides control and monitoring of Electric Heat Tracing (EHT) circuits for both freeze protection and process temperature maintenance. This controller can monitor and alarm on high and low temperature, high and low current, ground-fault levels, voltage, and supports a host of additional features to offer the utmost in control and monitoring of EHT.

The Elexant 4010i controller is available in two output types: an electromechanical relay (EMR) for use in nonhazardous locations, and a solid-state relay (SSR) for use in nonhazardous and Class I Div. 2 / Zone 2 hazardous locations. The controller is protected by a Fiber reinforced plastic or Stainless steel enclosure, both with front window (-FW or -SW). Multiple communication ports allow flexible connectivity for remote monitoring, configuration, and ease of integration with nVent RAYCHEM Supervisor software or a Distributed Control System (DCS).

Control

The Elexant 4010i measures temperatures of up to three directly- connected temperature sensors. The controller also supports 4-20mA inputs, allowing the use of external temperature sensor converters with thermocouples or other sensor types. The Elexant 4010i also features line sensing, ambient sensing, Proportional Ambient Sensing Control (PASC), and power limiting modes.

Monitoring

A complete set of parameters are measured, including ground fault, temperature, current and voltage to ensure system integrity. The controller can be set to periodically check the heating cable for faults, alerting maintenance personnel of a heat-tracing problem eliminating costly manual maintenance checks.

A programmable dry contact alarm relay is provided for local or remote alarm annunciation.

Ground-Fault Protection

National electrical codes require ground-fault equipment protection on all heat-tracing circuits. The Elexant 4010i controllers incorporate ground-fault sensing with alarm, and trip functionality. Internal self-tests are automated, eliminating the need for manual testing. Heat-tracing circuits equipped with Elexant 4010i controllers do not require additional ground-fault detection equipment, simplifying installation and reducing costs.

Installation

The Elexant 4010i comes ready to install, eliminating the need for custom panel design or field assembly. The NEMA 4X/IP6x-rated FRP or stainless steel enclosures are approved for use in both indoor and outdoor locations. Wiring is as simple as connecting the incoming and outgoing power wiring (up to 277 Vac) and temperature sensors as needed for the application.

The Elexant 4010i provides an intuitive user interface that makes it easy to use and program. No additional programming devices are needed. Alarm conditions and programming settings are easy to read and interpret on the color touch screen. Settings are stored in non-volatile memory in the event of a power failure.

Communication

Elexant 4010i units come equipped with RS485 and Ethernet ports and can be readily connected to a distributed control system (DCS). The units support both the Modbus RTU and Modbus/TCP protocols. The controller may be networked to a host PC running Windows-based nVent RAYCHEM Supervisor software for central programming, status review, and alarm annunciation.

GENERAL

Area of Use	Nonhazardous locations (EMR versions)
	Nonhazardous and Class I, Division 2/Zone 2 hazardous locations (SSR versions)
Approvals	**Hazardous locations**

c UL us LISTED
E4905419
Proc. Cont. Eq.
Use in Haz. Loc.
(Associated Apparatus)

Class I, Division 2, Group A,B,C,D T4 Type 4X
Class I, Zone 2, AEx nA nC [ia Ga] IIC T4 Gc
Ex ec nC [ia Ga] IIC T4 Gc
IP64 (FW) IP66 (SW)

DEMKO 18 ATEX 2091 X
IECEx UL 18 .0098X
II 3 (1)G Ex ec nC [ia Ga] IIC T4 Gc
IP64 (FW) IP66 (SW)

I.S Temperature Sensor Inputs (Optional)	Um = 305VAC	
Associated Apparatus	Uo = 5.4V	Ca = 65uF
Entity Parameters	Io = 0.083A	La = 2mH

Non-Hazardous locations

c UL us LISTED
E498881
Proc. Cont. Eq.

Enclosure Type 4X
IP64 (FW) IP66 (SW)

Electromagnetic Compatibility	IEC 61326-1:2012 / EN 61326-1:2013
Supply voltage	100Vac to 277Vac, +/-10%, 50-60Hz
Internal power consumption	< 24W

ENVIRONMENTAL

Protection	Type 4X, IP64 (FRP enclosure)
	Type 4X, IP66 (stainless steel enclosure)
Materials	Fiber-Reinforced Plastic (FRP) or stainless steel (SS304)
Ambient operating temperature	-40°C to 60°C (-40°F to 140°F)
Ambient storage temperature	-55°C to 85°C (-67°F to 185°F)
Relative humidity	0% to 90%, noncondensing
Environment	PD2, CAT III
Max altitude	2,000 m (6,562 ft)

CONTROL

Relay Type	Double-pole, mechanical (EMR versions)
	Double-pole, solid-state (SSR versions)
Voltage, maximum	277Vac nominal, 50/60Hz
Current, maximum	32A @ 40°C, de-rated to 24A @ 50°C and further de-rated to 16A @ 60°C (EMR)
	32A @ 40°C, de-rated to 24A @ 50°C and further de-rated to 16A @ 60°C (SSR)
Control algorithms	EMR: On/Off, PASC, always on, always off
	SSR: On/Off, proportional, PASC, always on, always off
Control Range	-200°C to 700°C (-328°F to 1292°F)

TYPICAL ENCLOSURE DIMENSIONS ([INCHES] MM)

Elexant 4010i-EMR-SW

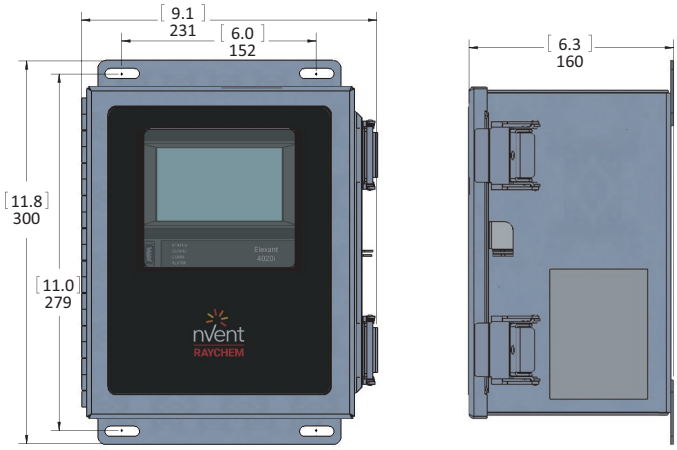

Elexant 4010i-EMR-FW

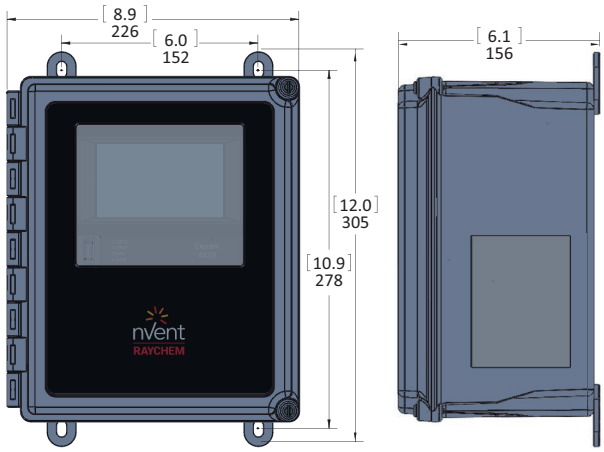

Elexant 4010i-SSR-SW

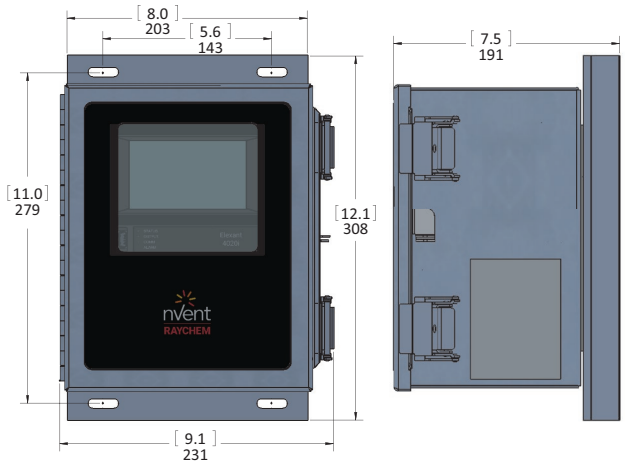

Elexant 4010i-SSR-FW

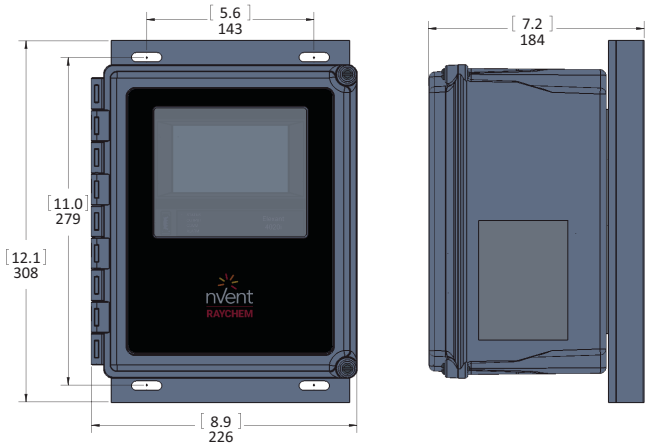

MOUNTING

FRP enclosure with EMR (EMR-FW)	Surface mounting with four holes on 6.0 in x 10.9 in (152 mm x 278 mm) centers Hole diameter: 0.3 in (8 mm)
FRP enclosure with SSR (SSR-FW)	Surface mounting with four holes on 5.6 in x 11.0 in (143 mm x 279 mm) centers Hole diameter: 0.3 in (8 mm)
SS enclosure with EMR (EMR-SW)	Surface mounting with four holes on 6.0 in x 11.0 in (152 mm x 279 mm) centers Hole diameter: 0.3 in (8 mm)
SS enclosure with SSR (SSR-SW)	Surface mounting with four holes on 5.6 in x 11.0 in (143 mm x 279 mm) centers Hole diameter: 0.3 in (8 mm)

MONITORING

Temperature	Low alarm range	-200°C to 700°C (-328°F to 1292°F) or OFF
	High alarm range	-200°C to 700°C (-328°F to 1292°F) or OFF
Ground fault	Alarm range	10mA to 500mA or OFF
	Trip range	10mA to 500mA or OFF
Current	Low alarm range	0.1A to 100A or OFF
	High alarm range	0.1A to 100A or OFF
	Power limit range	8 W to 30 kW

Voltage	Low alarm range	80Vac to 300Vac or OFF
	High alarm range	80Vac to 300Vac or OFF
Resistance	Low resistance range	1% to 100% of deviation from nominal
	High resistance range	1% to 250% of deviation from nominal
Autocycle	Diagnostic test interval	1 to 750 hours

TEMPERATURE SENSOR INPUTS

Quantity	3 Each can be individually set to one of the types below.

Types

100Ω platinum RTD	3-wire, α=0.00385 ohms/ohm/°C -200°C to 700°C (-328°F to 1292°F), ± 1°C Can be extended with a 3-conductor shielded cable of 20Ω maximum per conductor
100Ω nickel iron RTD	2-wire, α=0.00599 ohms/ohm/°C -73°C to 350°C (-99°F to 662°F), ± 1°C Can be extended with a 2-conductor shielded cable of 20Ω maximum per conductor
100Ω nickel RTD	2-wire, α=0.00618 ohms/ohm/°C -70°C to 250°C (-94°F to 482°F), ± 1°C Can be extended with a 2-conductor shielded cable of 20Ω maximum per conductor
Thermocouple	Requires external 4-20mA converter 4-20mA current loop, ±0.05mA, 24Vdc loop power

Intrinsic Safety Barriers included on RTD Inputs when using IS models.

RTD Intrinsic Safety Associated Apparatus Entity Parameters

Uo (Maximum Output Voltage): 5.4V	La (Maximum External Inductance): 2mH
Io (Maximum Output Current): 0.083A	Ca (Maximum External Capacitance): 65uF
Po (Maximum Output Power): 0.449W	

DIGITAL INPUTS

Quantity	Two multi-purpose inputs for connection to external dry (voltage free) contact or DC voltage May be configured for Hand-Off-Auto (HOA) operation
Rating	100 Ω max loop resistance or 5-24Vdc @ 1mA maximum

OUTPUTS

Alarm Relay	Form-C dry contact: 100 VAC to 277 VAC, 3A , 50/60Hz
Auxiliary Output	24Vdc, max load of 250mA @ 40°C, de-rated to 165mA @ 60°C

CONFIGURATION

Method	Touch screen display
Units	°F or °C
Idle display	Sensor temperature, control temperature, heater current, voltage, power, alarm status
LEDs	Status, heater on, alarm conditions, receive / transmit data
Memory	Nonvolatile, restored after power loss, checksum data checking
Stored usage parameters	Minimum and maximum process temperature, maximum ground-fault current, minimum and maximum voltage, maximum heater current, power accumulator, contactor cycle count, total time in use, heater on time

Alarm conditions	Low / high temperature, low / high current, low / high voltage, low / high resistance, ground-fault alarm / trip, RTD failure, loss of programmed values, EMR or SSR failure, equipment protection trip, attached device alarm, contactor lifetime exceeded
Alarm Modes	Normal (solid on), flash (on & off), toggle (re-ring new alarms)
Control Algorithms	EMR: On/Off, PASC, always on, always off
	SSR: On/Off, proportional, PASC, always on, always off
Equipment Protection	Ground fault trip, low / high temperature limit, Soft-Start features, (heat trace output limiting, SSR overcurrent protection, circuit breaker nuisance trip prevention)
Load Shedding	Up to 8 zones, with temperature failsafe and communication timeout (requires nVent RAYCHEM Supervisor)
Profiles	Built-in default setting profiles for common heat trace applications Up to two additional user configurations can be saved and reloaded. Saved configurations can be saved to, and loaded from, a USB thumb drive
Network	Automatic network configuration with DHCP, or static IP configuration
Firmware Updates	User updateable using a USB thumb drive
Multi-language Interface	English, French, German, Spanish, Russian
Other	Password protection, text tags / identifiers for controller and temperature sensors

CONNECTION TERMINALS

Power supply input	Screw terminals, 24 – 5 AWG (0.2 – 16.8mm^2)
Heating cable output	Screw terminals, 24 – 5 AWG (0.2 – 16.8mm^2)
Torque range for screw terminals	1.2 – 1.5 Nm
Ground (Earth)	Three box lugs, 14 – 2 AWG (2.0 – 33.6 mm^2)
Sensor / Other terminals	Cage clamp terminals, 28 – 12 AWG (0.08 – 3.3 mm^2)

COMMUNICATIONS

RS-485

Type	2-wire RS-485
Cable	One shielded twisted pair
Length	1,200 m (4,000 ft.) maximum
Quantity	Up to 247 devices per port
Data Rate	9600, 19.2k, 38.4k, 57.6k baud
Parity	None, even, odd
Stop bits	0, 1, 2
Tx delay	0 – 5 seconds
Protocol	Modbus RTU

Ethernet

Type	10/100 Base-T
Length	100 m (328 ft) max
Data rates	10 or 100 MB/s
Protocol	Modbus/TCP, DHCP
Connection terminals	Shielded 8-pin RJ-45

ORDERING DETAILS

Description	Catalog number	Part number	Weight (kg/lbs)
nVent RAYCHEM Elexant 4010i controller in an 8 in x 10 in **FRP** enclosure with window. 2-pole 32A EMR. Controls a single circuit with a 2-pole electromechanical relay. (Approved for nonhazardous locations only)	10380-001	4010i-EMR-FW	4.6/10.2
nVent RAYCHEM Elexant 4010i controller in an 8 in x 10 in **stainless steel** enclosure with window. 2-pole 32A EMR. Controls a single circuit with a 2-pole electromechanical relay. (Approved for nonhazardous locations only)	10380-003	4010i-EMR-SW	6.6/14.6
nVent RAYCHEM Elexant 4010i controller in an 8 in x 10 in **FRP** enclosure with window. 2-pole 32A EMR. Controls a single circuit with a 2-pole electromechanical relay. Includes **intrinsically safe** barriers on RTD inputs. (Approved for nonhazardous locations only. RTDs may be placed in Class I, Div. 2/Zone 2, Div. 1/Zone 1 locations)	10380-005	4010i-EMR-IS-FW	4.6/10.2
nVent RAYCHEM Elexant 4010i controller in an 8 in x 10 in **stainless steel** enclosure with window. 2-pole 32A EMR. Controls a single circuit with a 2-pole electromechanical relay. Includes **intrinsically safe** barriers on RTD inputs. (Approved for nonhazardous locations only. RTDs may be placed in Class I, Div. 2/Zone 2, Div. 1/Zone 1 locations))	10380-007	4010i-EMR-IS-SW	6.6/14.6
nVent RAYCHEM Elexant 4010i controller in an 8 in x 10 in **FRP** enclosure with window. 2-pole 32A 277V SSR. Controls a single circuit with a 2-pole solid-state relay. (Approved for Class I, Div. 2/Zone 2 locations)	10380-002	4010i-SSR-FW	6.6/14.6
nVent RAYCHEM Elexant 4010i controller in an 8 in x 10 in **stainless steel** enclosure with window. 2-pole 32A 277V SSR. Controls a single circuit with a 2-pole solid-state relay. (Approved for Class I, Div. 2 /Zone 2 locations)	10380-004	4010i-SSR-SW	8.6/19.0
nVent RAYCHEM Elexant 4010i controller in an 8 in x 10 in **FRP** enclosure with window. 2-pole 32A 277V SSR. Controls a single circuit with a 2-pole solid-state relay. Includes **intrinsically safe** barriers on RTD inputs. (Approved for Class I, Div. 2 /Zone 2, RTDs may be placed in Class I, Div.2/Zone 2, Div. 1/Zone 1 locations)	10380-006	4010i-SSR-IS-FW	6.6/14.6
nVent RAYCHEM Elexant 4010i controller in an 8 in x 10 in **stainless steel** enclosure with window. 2-pole 32A 277V SSR. Controls a single circuit with a 2-pole solid-state relay. Includes **intrinsically safe** barriers on RTD inputs. (Approved for Class I, Div. 2 /Zone 2, RTDs may be placed in Class I, Div. 2/Zone 2, Div. 1/Zone 1 locations)	10380-008	4010i-SSR-IS-SW	8.6/19.0
RTD Sensors			
100-ohm platinum RTD with 10 foot stainless steel corrugated sheath	RTD10CS	RTD10CS	0.5/1.0
RTD, ambient, cable style	RTD-200	254741	0.05/0.1
C1D1 RTD, -100°F to 900°F, pipe mounted	RTD7AL	RTD7AL	0.9/2.0
RTD, -100°F to 900°F, pipe mounted	RTD4AL	RTD4AL	0.6/1.2
nVent RAYCHEM Supervisor Software	**Available for download at www.nvent.com**		

North America
Tel: +1.800.545.6258
Fax: +1.800.527.5703
Tel: +1.650.216.1526
Fax: +1.650.474.7711
thermal.info@nVent.com

Europe, Middle East, Africa
Tel: +32.16.213.511
Fax: +32.16.213.603
thermal.info@nVent.com

Asia Pacific
Tel: +86.21.2412.1688
Fax: +86.21.5426.2937
cn.thermal.info@nVent.com

Latin America
Tel: +1.713.868.4800
Fax: +1.713.868.2333
thermal.info@nVent.com

Our powerful portfolio of brands:

CADDY ERICO HOFFMAN RAYCHEM SCHROFF TRACER

RAYCHEM-DS-H60447-Elexant4010i-EN-2102