THERMOSTAT CONTROLLER

FEATURES

- Mechanical thermostat for controlling filter fans and heaters
- Registers surrounding air and can switch inductive and resistive loads via snap-action contact
- Clips for vertically mounting on 35 mm DIN rail (EN 60715)
- An integrated resistor (RF) can be connected to improve the switch temperature difference

FINISH

- RAL7035 light gray
- Plastic housing UL94V-0

NOTES

- The contact system of the regulator is subjected to environmental influences and contact restistance may change which can lead to a voltage drop and/or self-heating of contacts
- If the Normally Closed contact is used, the switch temperature difference could be reduced by connecting terminal "N" (RF heating resistor). It causes thermal feedback which is subject to surrounding conditions and thus has to be determined for each individual application.
- Voltage only needs to be specified if the optional use of the RF resistor is desired

INDUSTRY STANDARDS

cURus; File No. E164102

CE

Performance Data Thermostat Controller

CATALOG NUMBERS	THERM16F	THERM26F	THERM16C	THERM26C
DESIGN DATA				
Control Range	40 to 140 F		5 to 60 C	
Switching Differences:				
Bimetal controllers	Approximately 9 F (5K), tolerance -5.4/+3.6 F (-3/+2K)			
Contact	Snap contact as break contact-NC Make contact-NO			
Switching Capacity:				
Minimum switching capacity	10 mA			
Maximum switching capacity, NC	10 A resistive / 4 A inductive @ AC 115V 10 A resistive / 4 A inductive @ AC 250V DC 30 W			
Maximum switching capacity, NO	5 A resistive / 2 A inductive @ AC 115V 5 A resistive / 2 A inductive @ AC 250V DC 30 W			
Supply Voltage	**115V**	**230V**	**115V**	**230V**
Protection	IP20			
Sensor	Bimetal			
Power Connection	4-pole terminal, clamping torqe 0.5 Nm maximum: solid/stranded wire, 14 AWG maximum (2.5 mm)*			
Ambient Temperature (°F / °C)	-4 to 176 F		-20 to 80 C	
Storage Temperature (°F / °C)	-49 to 149 F		-45 to 65 C	
UNIT CONSTRUCTION				
Temperature Display	Fahrenheit		Celsius	
Unit Dimensions - H x W x D (in./mm)	2.64 x 1.97 x 1.50/67 x 50 x 38			
Weight (oz/g)	2.00/60			

*When connecting with stranded wires, wire end ferrules must be used

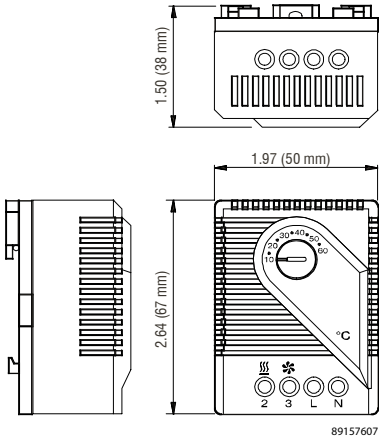

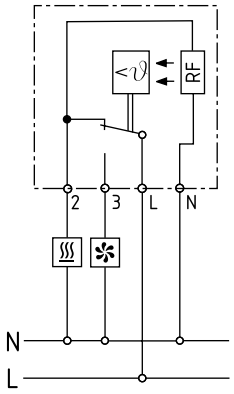

DUAL THERMOSTAT

INDUSTRY STANDARDS

cURus; File No. E164102

CSA File No. 215952
CE

APPLICATION

Two thermostats in one, the Dual Thermostat independently controls equipment heating and cooling systems.

FEATURES

- Two thermostats; one normally closed (NC), red, and one normally open (NO), blue, in one casing
- Wide adjustable temperature range (32 -140 F)
- Thermostatic bimetallic sensor element
- Connection: 4-pole terminal for AWG 14 max (2.5 mm^2)
- Mounting clip for 35-mm DIN rail

FINISH

- Light-gray plastic, UL94V-0

Performance Data Dual Thermostat

CATALOG NUMBERS	
	ADLTEMP
ELECTRICAL DATA	
Switching Capacity (Normally Closed)	10 A resistive/2 A inductive @250 VAC, DC 30 W
Switching Capacity - Normally Open	5 A resistive/2 A inductive @250 VAC, DC 30 W
Setting Range - Normally Closed (°F/C°)	32/0 to 140/60
Setting Range - Normally Open (°F/C°)	32/0 to 140/60
UNIT CONSTRUCTION	
Unit Dimensions - H x W x D (in./mm)	2.64 x 1.97 x 1.81/67 x 50 x 46

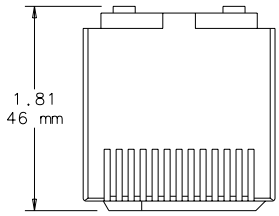

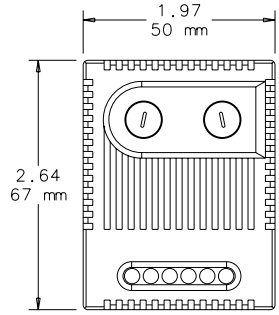

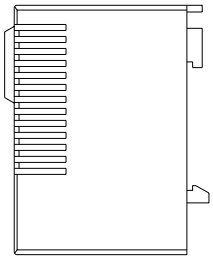

87939707

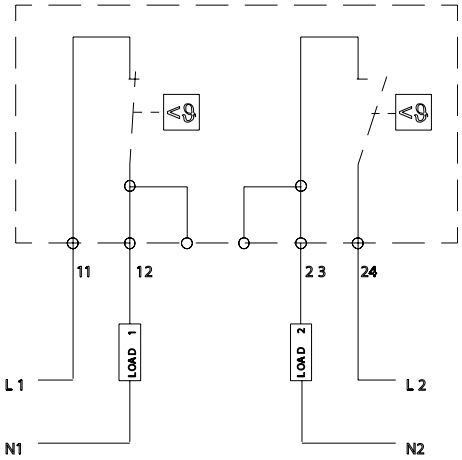

CONNECTION DIAGRAM

nVent | HOFFMAN

ELECTRONIC HYGROTHERM

APPLICATION

The Electronic Hygrotherm senses ambient temperature and relative air humidity and adjusts a connected device to maintain temperature and humidity set points.

FEATURES

- Temperature (32-140 F) and humidity (50%-90% RH) adjustment
- High switching capacity
- Optical function displays (LED) in each control
- Mounting clip for 35-mm DIN rail
- Change-over contact (relay)
- Connection: 5-pole terminal for AWG 14 max (2.5-mm square). Clamping torque .5 Nm (4.4 in-lbs) maximum.
- Plastic housing UL94V-0
- Vertical mounting
- Operating voltage is AC 100-240 V with maximum switching capacity of 10 A resistive / 1.6 A inductive at AC 240 V

FINISH

- Light-gray plastic UL94V-0

INDUSTRY STANDARDS

cURus; File No. E164102

CE

Performance Data Electronic Hygrotherm

CATALOG NUMBERS	
	ATEMHUM
ELECTRICAL DATA	
Hysteresis	~ 3.6 F (2K) ± 1.8 F (1K) tolerance
Humidity Set Point (adjustable)	50-90% RH
Temperature Set Point (adjustable) (°F/°C)	32/0 to 140/60
Operating Temperature Range (°F/°C)	-40 to 140/-40 to 60
Storage Temperature (°F/°C)	-40 to 140/-40 to 60
CONTACTS	
3 and 5	
Close at...	humidity rise or temperature drop
Open at...	humidity drop or temperature rise
Use for...	heaters, dehumidifiers, low-temp alarms
4 and 5	
Close at...	humidity drop or temperature rise
Open at...	humidity rise or temperature drop
Use for...	cooling, humidifiers, high-temp alarms
UNIT CONSTRUCTION	
Unit Dimensions - H x W x D (in./mm)	3.03 x 2.36 x 1.69/77 x 60 x 43

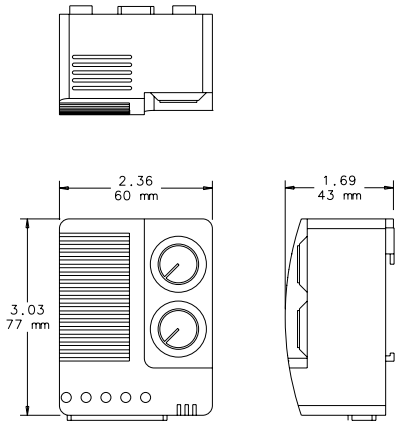

87939706

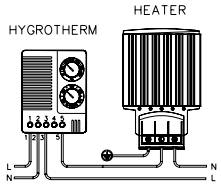

EXAMPLE OF CONNECTION

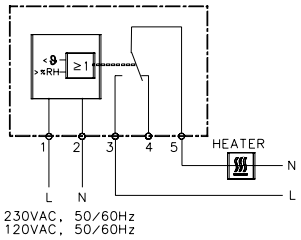

CONNECTION DIAGRAM

MECHANICAL HYGROSTAT

INDUSTRY STANDARDS

cURus; File No. E164102

CE

APPLICATION

The Mechanical Hygrostat controls relative air humidity inside an enclosure to prevent condensation and corrosion that can damage components. It can also be connected to an enclosure heater, cooling fans, warning lights or other devices.
The critical relative humidity (RH) level for most components is 65 percent. Above 65 percent RH, condensation can form and cause electrical equipment to malfunction.

FEATURES

- Adjustable relative humidity range
- High switching capacity
- Long service life (>100,000 cycles)
- Maximum permissible air velocity of 50 ft./sec. (15 m/s)
- Maximum switching voltage = 250 VAC
  250 V should be switched only in a non-condensing environment
- Change-over contact
- Mounting clip for 35-mm DIN rail
- Connection: 3-pole terminal for AWG 14 max. (2.5-mm squared)
- Contact resistance less than 10 mΩ

FINISH

- Light-gray plastic, UL94V-0

Performance Data Mechanical Hygrostat

CATALOG NUMBERS	
	AMHUM
ELECTRICAL DATA	
Switching Capacity (Minimum)	100mA @ AC/DC 20 V
Switching Capacity (Maximum)	5A @ AC 250 V (resistive load) 0.2A @ AC 250 V (inductive load at cos O = 0.8) DC 20W
Operating Temperature Adjustable) (°F/°C)	32/0 to 140/60
Storage Temperature (°F/°C)	-40/-40 to 140/60
UNIT CONSTRUCTION	
Unit Dimensions - H x W x D (in./mm)	2.64 x 1.97 x 1.50/67 x 50 x 38
Weight (oz/g)	2.00/60

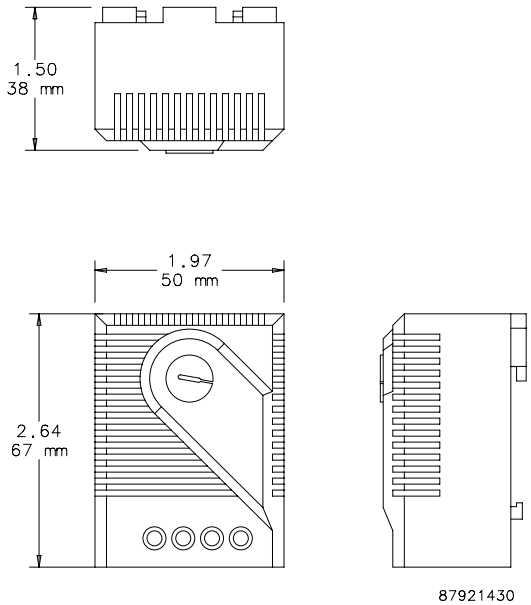

nVent | HOFFMAN

TEMPERATURE CONTROL SWITCH

FEATURES

- Additional label for conversion to Celsius scale and blank label to cover set point range label when adjustment after initial setting is not desired are included
- Bimetal temperature sensor
- Plastic housing
- Connections consist of tubular screw terminals for AWG 14 (.04 sq. in.)
- Provision for both panel mounting and DIN rail mounting

FINISH

- Molded plastic housing is black

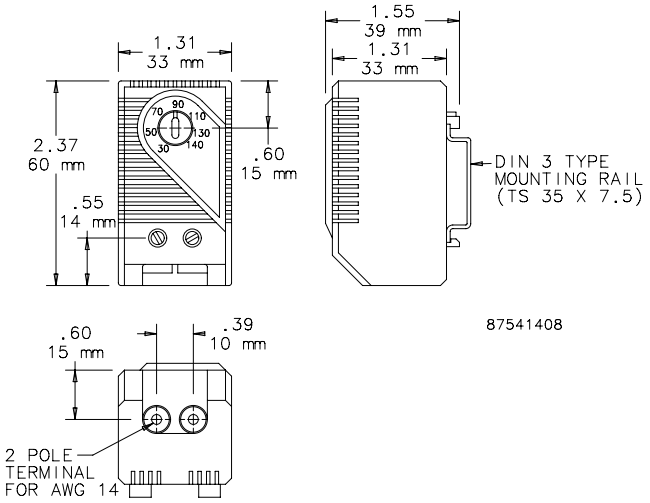

INDUSTRY STANDARDS

cURus; File No. E164102
UL94-VO

Protection rating IEC IP30
CSA Certified, File Number 215952
CE

APPLICATION

These easy-to-install thermostats regulate and monitor air temperature in enclosures that contain heat-emitting equipment. Thermostats prolong heater and fan life expectancy by controlling operation time and increase electrical component working efficiency by exposing them to fewer environmental contaminants.

Performance Data Temperature Control Switch

CATALOG NUMBERS	ATEMNC	ATEMNO
ELECTRICAL DATA		
Maximum Load (Switching Capacity)		
120 VAC	15 A resistive / 2 A inductive @ 120 VAC	
250 VAC	10 A resistive / 2 A inductive @ 250 VAC	
DC	DC 30 W	
Minimum load	20 mA (all voltages)	
Contact Type	NC (normally closed), quick acting	NO (normally open), quick acting
Control Application	Heater	Fan
UNIT CONSTRUCTION		
Unit Dimensions - H x W x D (in./mm)	2.37 x 1.31 x 1.55/60 x 33 x 39	

PANEL-MOUNT FAN SPEED CONTROLS

INDUSTRY STANDARDS

UL 508 Listed; File No. E249700
cUL Listed per CSA C22.2 No. 14; File No. E249700

APPLICATION

Perfect for offices, classrooms and other noise-sensitive areas. Fan Speed Control optimizes airflow in a cabinet or rack, balancing air volume requirements with noise level and power use.

FEATURES

- Automatically adjusts fan speed depending on remote temperature sensor input
- Temperature set point is field adjustable; preset at 35 C (95 F)
- Idle speed and temperature slope are field-adjustable
- Push-to-reset thermal circuit breaker inside control housing
- Compact polycarbonate control housing can be mounted in any position
- NEMA 5-15R outlet provides power to fan
- Six-foot (1.83-m) power cord plugs into standard 120 V, 50 or 60 Hz outlet
- Remote temperature sensor with 10-ft. (3.05-m) lead mounts in airflow
- Mounting brackets included

FINISH

- AFANTSC: Light-gray polycarbonate control housing

Performance Data Panel-Mount Fan Speed Controls

CATALOG NUMBERS	
	AFANTSC
ELECTRICAL DATA	
Rated Voltage	**120 VAC**
Maximum Nominal Current (Amps)	2
Temperature Settings (°F)	86, 95, 104, 113
Temperature Settings (°C)	30, 35, 40, 45
DESIGN DATA	
Description	Panel-Mount Fan Speed Control
Application	Fan speed controlled automatically with remote temperature sensor

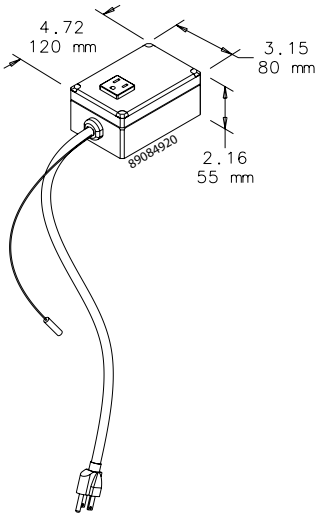

nVent | HOFFMAN

HAZARDOUS LOCATION THERMOSTAT

INDUSTRY STANDARDS

CE
Conformity Certificate LCIE (Laboratoire Central des Industries Electriques) LCIE 01 ATEX 6074

EEx d IIC T6/II 2 GD, IP6x T85 °C
IEC 60529, IP65/1 (grounded)

APPLICATION

Compact mechanical thermostat for temperature control of heaters or low-temperature alarms in enclosures that are used in explosion-hazardous areas.

FEATURES

- Compact design
- Set temperature
- High switching capacity
- Small hysteresis (switching difference)
- Long service life (greater than 100,000 cycles)
- Can usually be connected directly and switched without the need for additional relays
- Thermostatic bimetallic sensor element
- One-pole contact opens with rising temperature
- Mounting bracket and DIN clip for mounting
- Connection cable: Si HF - JZ 3 x AWG 18 x 3.3 ft. (0.75 mm² x 1 m)

FINISH

- Black anodized aluminum

Performance Data Hazardous Location Thermostat

CATALOG NUMBERS	
	HLTHERMNC
DESIGN DATA	
Maximum Operating Voltage (AC)	250 V
Maximum Operating Voltage (DC)	100 V
Switching Capacity @ 250 VAC	4A resistive; 1A ind. (cos f = 0.6)
Switch Off (Open) Temperature (°F)	77 +/- 6
Switch Off (Open) Temperature (°C)	25 +/- 3K
Switch On (Closed) Temperature below Switch Off Temperature (°F)	7.2 +/- 2
Switch On (Closed) Temperature below Switch Off Temperature (°C)	4 +/- 1K

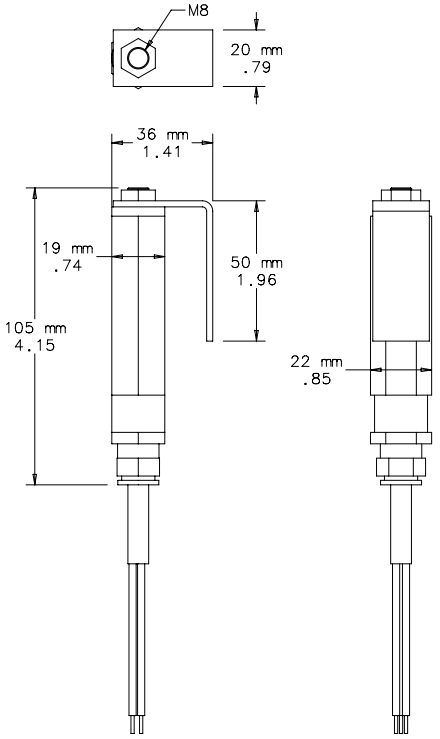

Notes