3. Remove inner side sections.

Using pliers, bend side sections down as far as you can and then bend back to original position. Side sections will break off easily.

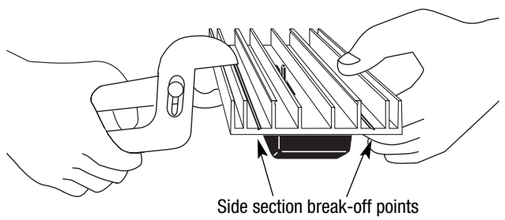

Note: When removing side sections, remove only inner side sections. **Do not remove side sections on outer ends of the gang.**

Example:

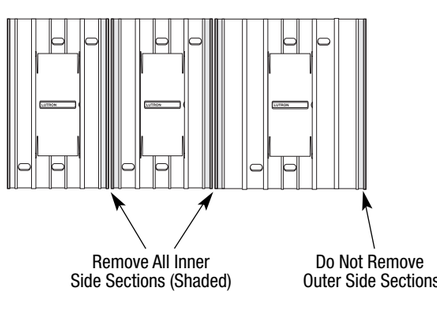

4. Assemble the controls.

Use the center or offset mounting holes as needed. Allow a 1/32 in (0.8 mm) space between controls for ease in attaching the wallplate.

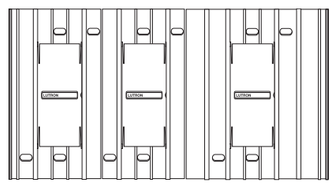

5. Snap on Multigang Wallplate

Example:

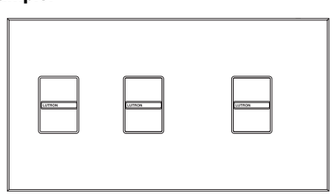

Technical Assistance

If you have questions concerning the installation or operation of this product, call the ***Lutron Technical Support Center.*** Please provide exact model number when calling.

+1.800.523.9466 (U.S.A., Canada, and the Caribbean)
Other countries call +1.610.282.3800
Fax +1.610.282.1243 Internet: www.lutron.com

Limited Warranty

Lutron will, at its option, repair or replace any unit that is defective in materials or manufacture within one year after purchase. For warranty service, return unit to place of purchase or mail to Lutron at 7200 Suter Rd., Coopersburg, PA 18036-1299, postage pre-paid.

THIS WARRANTY IS IN LIEU OF ALL OTHER EXPRESS WARRANTIES, AND THE IMPLIED WARRANTY OF MERCHANTABILITY IS LIMITED TO ONE YEAR FROM PURCHASE.THIS WARRANTY DOES NOT COVER THE COST OF INSTALLATION, REMOVAL OR REINSTALLATION, OR DAMAGE RESULTING FROM MISUSE, ABUSE, OR DAMAGE FROM IMPROPER WIRING OR INSTALLATION.THIS WARRANTY DOES NOT COVER INCIDENTAL OR CONSEQUENTIAL DAMAGES. LUTRON'S LIABILITY ON ANY CLAIM FOR DAMAGES ARISING OUT OF OR IN CONNECTION WITH THE MANUFACTURE, SALE, INSTALLATION, DELIVERY, OR USE OF THE UNIT SHALL NEVER EXCEED THE PURCHASE PRICE OF THE UNIT.

This warranty gives you specific legal rights, and you may have other rights which vary from state to state. Some states do not allow the exclusion or limitation of incidental or consequential damages, or limitation on how long an implied warranty may last, so the above limitations may not apply to you.
The design of this dimmer is a registered trademark of Lutron Electronics Co., Inc. and may be protected by one or more of the following U.S. trademark registrations: 1,617,349; 1,624,489; 1,624,490; 1,626,714; 1,638,913. Lutron and Nova are registered trademarks of Lutron Electronics Co. Inc. Lutron and Nova are registered trademarks of Lutron Electronics Co. Inc.
© 2011 Lutron Electronics Co., Inc.

nova®

Installation Instructions
Please Leave for Occupant

P/N 030-1545 Rev. B

Incandescent Preset Dimmers

N-603P, N-1003P, N-1503P, N-2003P

120 V~ 60 Hz

IMPORTANT NOTES:
Please read before installing.

- To avoid overheating and possible damage to the other equipment, do not use to control a receptacle, a fluorescent lighting fixture, a motor-operated appliance, or a transformer-supplied appliance.
- For incandescent lamps operating on 120 V~ 60 Hz only.
- Allow a minimum space of 4 ½ in (114 mm) above and below the dimmers for proper heat dissipation.
- Check new installation for shorts prior to installation of dimmer by using a standard switch and connecting appropriate wires to hot line and lamp with POWER OFF. Turn power ON. If lights do not work or breaker trips, a short is present. Correct the wiring and check circuit again. Install dimmer when short is no longer present.
- If a green or bare copper ground connection is not available in the wallbox, contact a licensed electrician.
- Turn POWER OFF when installing dimmer. Wiring with power on may result in personal injury or damage to this product which will void the warranty.
- For use where ambient temperatures range from 32 °F - 104 °F (0 °C - 40 °C)
- Dimmers must be mounted vertically.
- **Clean dimmer with a *soft damp cloth only.*** Do not use any chemical cleaners.

Installation:

1. TURN OFF POWER. Control may only be installed when power is turned off. Remove fuse or turn circuit breaker off.
2. Remove wallplate from dimmer to prevent damage and to access mounting holes. Pull out at top and bottom edges, plate will snap off.
3. Strip wallbox wires to the following lengths:
   - ½ in (13 mm) for 10, 12, and 14 AWG (4, 2.5 and 1.5 mm²)
   - ⅝ in (16 mm) for 16 and 18 AWG (1.0 and 0.75 mm²)
4. Use wire connectors supplied to make connections as shown in diagram.

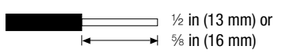

5. To wire in a single pole application:
   - Connect the green ground wire on the dimmer to the green or bare copper ground wire in the wallbox.
   - Connect the black wire on the dimmer to the live wire coming from the fusebox or circuit breaker.
   - Connect one red wire on the dimmer to the wire going to the light.
   - Cap off the remaining red wire on the dimmer with a wire connector. The control will function properly if either red wire is used. See Figure 1.

Figure 1. Single Pole Wiring

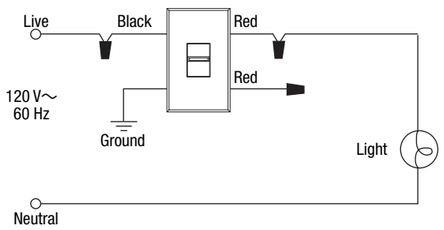

LUTRON®

Lutron Electronics Co., Inc.
7200 Suter Road
Coopersburg, PA 18036 U.S.A.
05/2011 P/N 030-1545 Rev. B

To Replace existing 3-Way Switch:
For wiring a N-603P, N-1003P, N-1503P or N-2003P in a 3-Way application, the wall switch has three screws; two of one color and a third of a different color. It also has a green ground screw.

Using the wire connectors provided:

- Connect the wire from the green ground screw to the green ground wire of the dimmer.
- Connect the wire from the odd color screw to the black wire of the dimmer.
- Connect the wire from one of the remaining switch screws to one of the red wires of the dimmer.
- Connect the wire from the last switch screw to the last red wire of the dimmer.

Figure 2. 3-Way Wiring

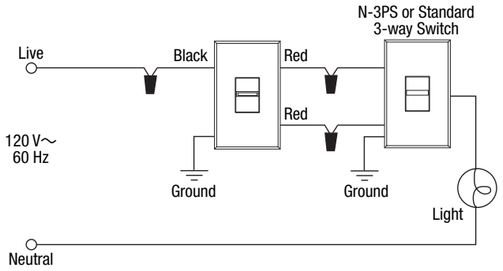

Figure 3. 4-Way Wiring

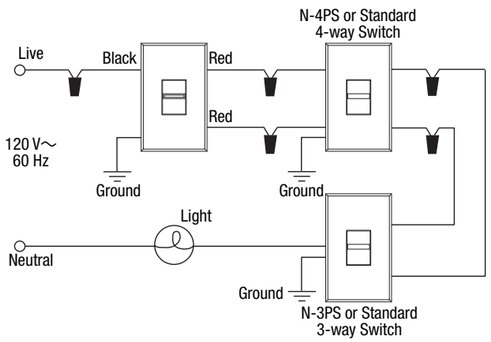

Note: Only one dimmer per 3-way circuit. Position of N-603P, N-1003P, N-1503P, N-2003P and 3-Way switch may be reversed in wiring diagram. 4-way switches must be wired between N-603P, N-1003P, N-1503P, N-2003P and 3-way switch.

Mounting Diagram:

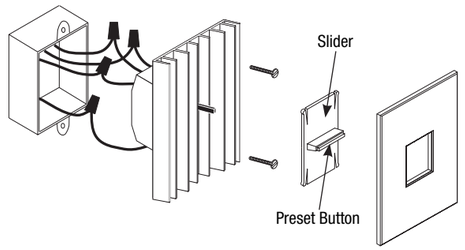

6. Push wires back into the wallbox. Allow room for dimmer to be installed.
7. Mount dimmer to wallbox using 2 screws provided and the center mounting screw holes. Unit MUST be mounted vertically.
8. Snap wallplate onto fins.

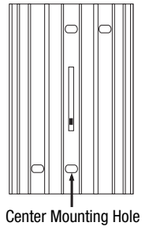

Operation:

1. Turn ON power. Push preset button in center of the slider to turn lights on to the level set by the slider.
2. Raise slider for brighter light, lower for dimmed light. Push button again to turn lights OFF.
3. For 3-Way applications: When switching power from a standard 3-way switch, light will come on at the level set by slider on the dimmer.

Note: When it is necessary to replace lamps or service the controlled fixtures, turn OFF circuit breaker or remove fuse.

Ganging and Special Wallplates:

Dimmers can be ganged with other Nova controls. FOR NEW CONSTRUCTION we suggest installing the dimmers without breaking or removing the side sections. This will insure that the control can be loaded to its full-rated capacity (no derating).
Follow the instructions below to install your controls with NO SIDE SECTIONS REMOVED. For a retrofit installation, side sections can be removed from controls to fit existing wallboxes; however, this will require lamp derating.

Multigang Installations:

No Side Sections Removed,
No Derating Required

1. **Determine the number of large and small controls required.**
   When ganging any combination of small and large controls, place a small control on one extreme end of the gang, and a large control at the other end of the gang. Use the chart below to find your wallbox requirements.

Note: N-603P and N-1003P are listed as “small” controls. N-1503P and N-2003P are listed as “large” controls.

Wallbox Requirement Chart

No Side Sections Removed		Number of Small Controls						
		0	1	2	3	4	5	6
Number of Large Controls	0	0	1	1+1	4	4+1	7	1+7
	1	1	3	5	6	8	9	11
	2	4	6	7	9	10	12	13
	3	6	8	10	11	13	14	16
	4	9	11	12	14	15	17	18

Note: When ganging an even number of small controls with no side sections removed do not use plaster rings or gangbox covers. Space an additional wallbox ¾ in (19 mm) apart from the other wallbox(es). A ¾ in (19 mm) chase nipple is recommended as a spacer between the wallboxes.

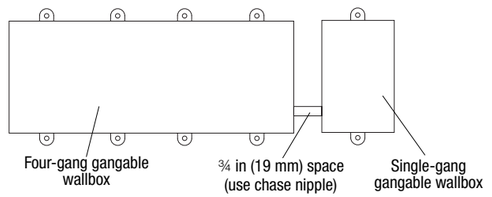

Note: Masonry Multigang Wallboxes are recommended for neater installations.

2. **Assemble the controls.** Use the center or offset mounting holes as needed. Allow a 1/32 in (0.8 mm) space between controls for ease in attaching the wallplate.

Example: Four-Gang Controls

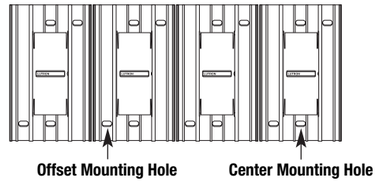

3. **Snap on Multigang Wallplate**

Example: Four-Gang Wallplate

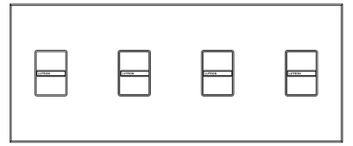

Multigang Installation

Side Sections Removed, Derating Required

1. **Determine the number of large and small controls required.**
   When ganging any combination of small and large controls, place all small controls on one end of the gang and all large controls on the other. Use the chart below to determine the size and maximum capacity of each control.

Wallbox Requirement Chart

All Inside Sections Removed		Number of Small Controls						
		0	1	2	3	4	5	6
Number of Large Controls	0	0	1	2	3	4	5	6
	1	1	3	4	5	6	7	8
	2	3	5	6	7	8	9	10
	3	5	7	8	9	10	11	12
	4	7	9	10	11	12	13	14

2. **Derating is necessary when side sections are removed.**

Capacity Derating Chart

Model	Control Size	No Sides Removed	1 Side Removed	2 Sides Removed
N-603P	S	600 W	600 W	500 W
N-1003P	S	1000 W	900 W	700 W
N-1503P	L	1500 W	1250 W	1000 W
N-2003P	L	2000 W	1800 W	1500 W