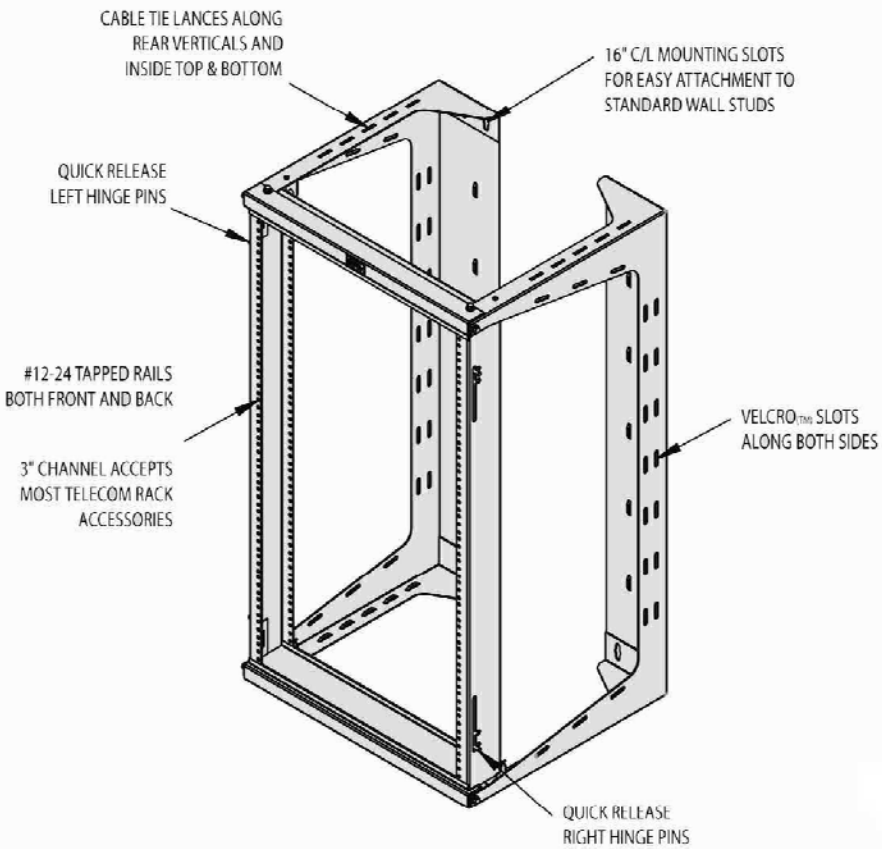

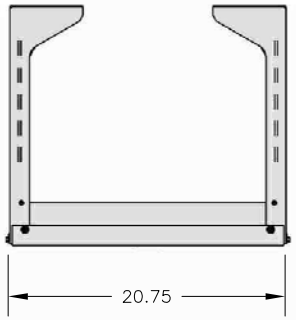

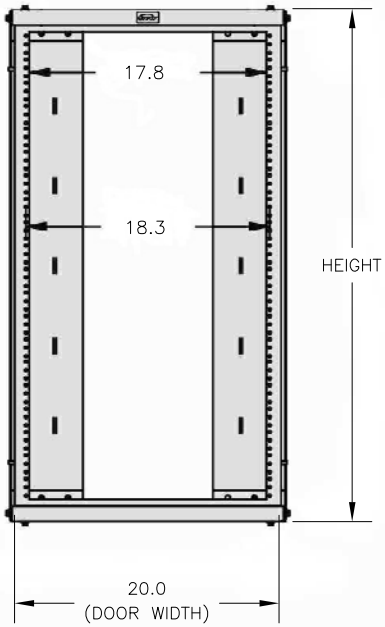

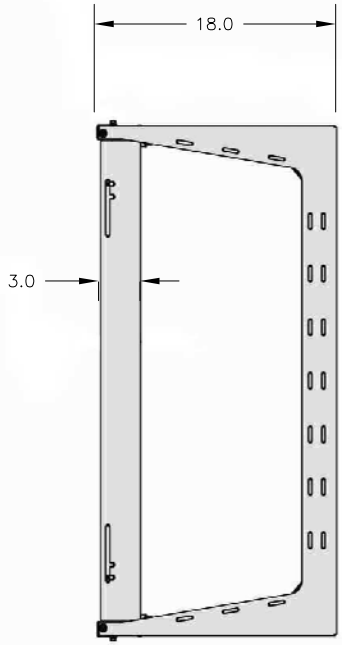

PART NUMBER	HEIGHT
T24PPR	24"
T38PPR	38"
T47PPR	47"

INVENTORS

HellermanTyton

ALL PROPRIETARY RIGHTS IN THE SUBJECT MATTER SHOWN ON THIS DRAWING ARE EXCLUSIVE PROPERTY OF HELLERMANNTYTON

name	date	city, state

REVISION

DRAWING

level 01

date 02/21/11

by AAC

ECN # 011766

part level –

DIMENSIONS

TOLERANCES

.XXXX= ±.0005

.XXX= ±.005

.XX= ±.01

.X= ±.03

∠= ±0.5°

unless otherwise specified

units inches

PART

number SEE CHART

phase PRODUCTION

name

WALL MOUNT SWING OUT RACK

material

STEEL (BLACK POWDER COAT)

DRAWING

FORMAT AH version Q

CAD ACAD

scale XX

computer file number MI\CST\3023007_01

previous number

drawn A.A.C. 02/21/11

checked K.A.C. 02/21/11

approved

type CUSTOMER

sheet 1 of 1

number MI3023007CST