Revision level		Revision Record	Changed	Date	Approved	Date
part	drawing					
–	04	See ECN 011820	A.A.C.	04/22/11	K.A.C.	04/22/11

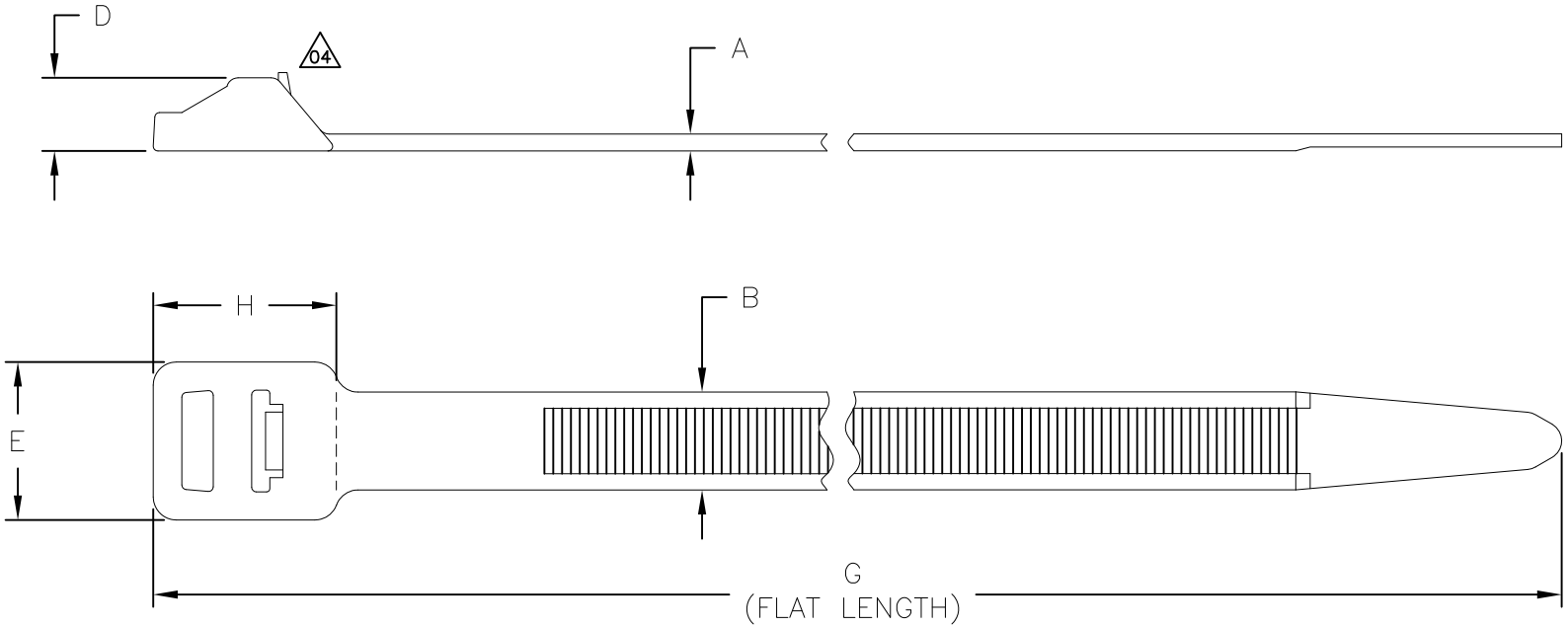

PRODUCT CODE DESCRIPTION

RT250R_UV

COLOR
(CONSULT FACTORY FOR AVAILABLE COLORS)

Aerospace Spec Tie SAE AS33671	Product Code	Cable Range (mm)	Material	A	B	D	E	G	H	Min Loop Tensile Strength (newtons)
no	RT250R_	12 to 125	PA66	1.9 ±0.2	12.5±0.2	9.5 ±0.5	20.0 ±0.5	515.0 ±5.0	22.4 ±1.0	1115
no	RT250R_HIR		PA66HIR							
no	RT250R_UV		PA66UV							

SEE CHART

Material

Dimension tolerances unless otherwise specified
.XXXX =
.XXX =
.XX =
.X = ± NOTED
∠ =

Dimension Units mm

PERFORMANCE SPECIFICATION

ACAD MECH 2010

Drawn	A.A.M.	12/12/00
Approved	K.A.C.	04/22/11

Scale 1:1

Computer File Number CT\CST\2250004_04

Title
RT250R
HEAVY DUTY LASHING
RELEASABLE CABLE TIE

ALL PROPRIETARY RIGHTS IN THE SUBJECT MATTER SHOWN ON THIS DRAWING ARE EXCLUSIVE PROPERTY OF HELLERMANNTYTON

HellermannTyton
7930 N. Faulkner Rd.
Milwaukee, WI 53224
Ph: (414) 355-1130
Fx: (414) 362-8338

Drawing-No
CT2250004CST

Format AH

Sheet 1 of 1