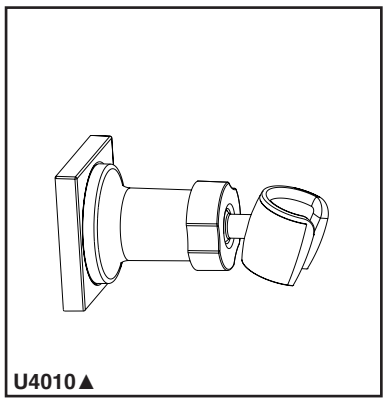

U4010▲

WALL MOUNT

■ Square Wall Mount Bracket

Submitted Model No.: _____

Specific Features: _____

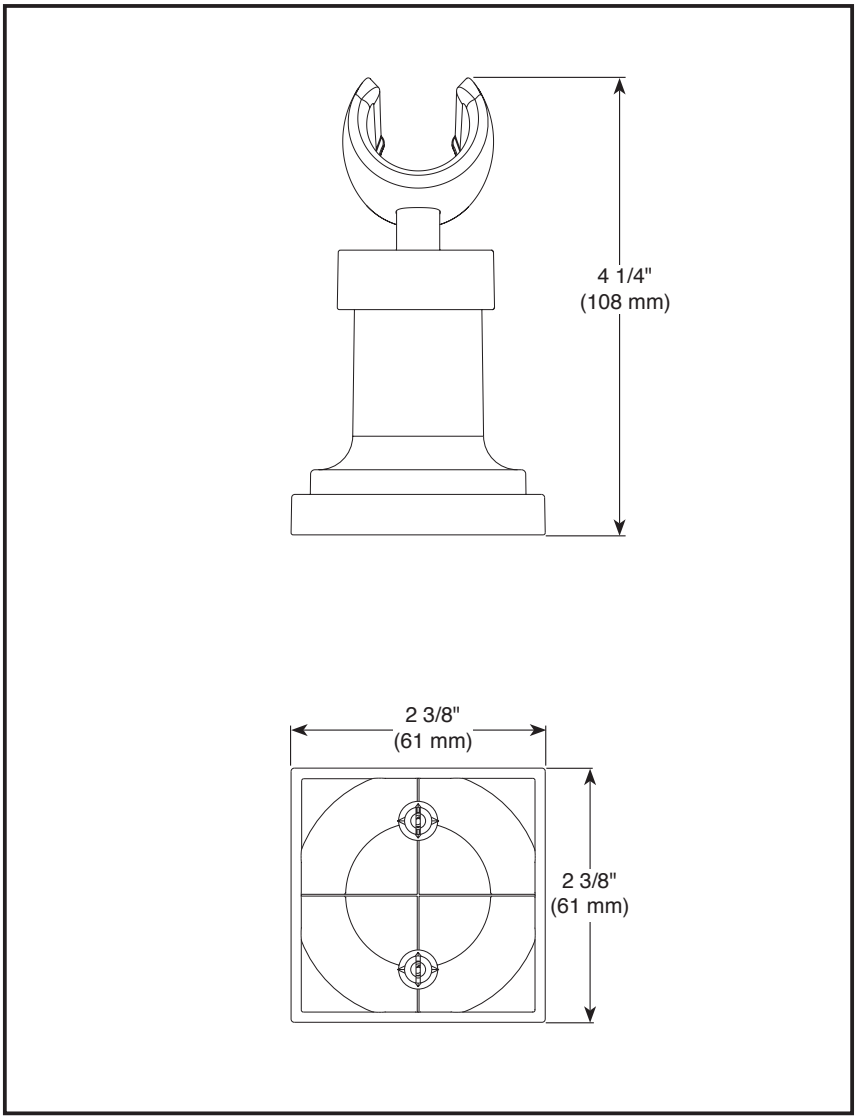

▲ **Designate proper finish suffix**

STANDARD SPECIFICATIONS:

- Accommodates conical hose nuts.
- Concealed installation screws.
- Adjustable mount.

WARRANTY

- Lifetime limited warranty on parts (other than electronic parts and batteries) and finishes; or, for commercial users, for 5 years from the date of purchase.

Delta reserves the right (1) to make changes in specifications and materials, and (2) to change or discontinue models, both without notice or obligation. Dimensions are for reference only. See current full-line price book or www.deltafaucet.com for finish options and product availability.

DSP-B-U4010 Rev. A

DELTA FAUCET COMPANY
55 E. 111th Street, Indianapolis, Indiana 46280
350 South Edgeware Road, St. Thomas, Ontario Canada N5P 4L1
© 2014 Masco Corporation of Indiana