HUBBELL®

RACO®

A Division of Hubbell Incorporated (Delaware)

NEW!

Part No. RACIBB-5

INTERSYSTEM BONDING BRIDGE

RACO® / BELL® announces its new Intersystem Bonding Bridge product that meets the NEC Article 250.94 "Bonding for Other Systems" requirement. This NEC requirement calls for all telephone, cable and satellite grounding conductors be bonded to ground at a single location for residential and commercial applications.

The new bonding bridge product is designed to install the grounding conductor with a lay-in style lug and multiple mounting holes for 5 total connections. This lay-in lug feature provides for a quick and easy installation.

The RACO / BELL bonding bridge has a compact design and includes a U.V. stabilized cover that can be painted to match the aesthetics of the home or facility where it is being installed.

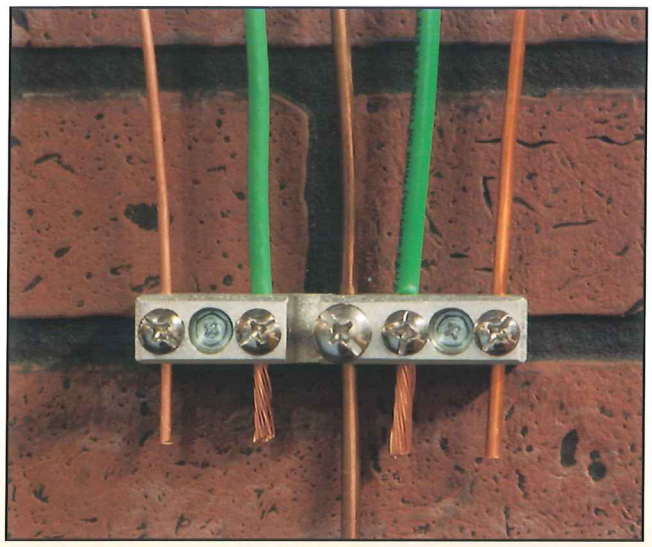

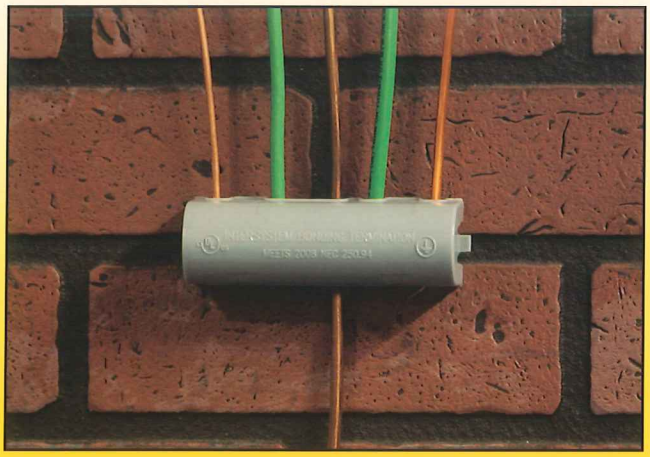

RACO / BELL - building bridges for electrical safety and efficiency for over 90 years!

MEETS 2008 NEC ARTICLE 250.94

Ordering Information

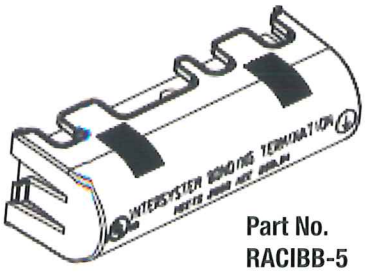

Part No.
RACIBB-5

Material

- One piece die cast zinc construction
- Stainless steel hardware

Dimensions

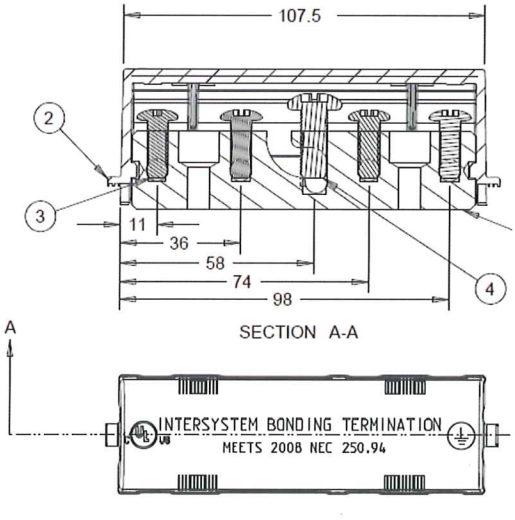

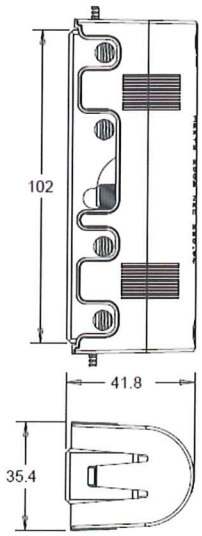

RACO® Intersystem Bonding Bridge Ordering Information - Dimensions

Catalog Number	Grounding Conductor Range	Ship Ctn. Qty.	Carton Dimensions			ITF	UPC A
			L	W	H		
RACIBB-5	#6 - #2 AWG & #14 - #4 AWG	6	5-7/8"	4-5/8"	8-1/4"	50050169986771	050169986776

OTHER GROUNDING PRODUCTS FROM RACO

2504 - 2505

2507 - 2508

2512 - 2513
2522 - 2523

RACO® Miscellaneous Ground Clamps Ordering Information

Catalog Number	Pipe Size	Grounding Conductor Size	Ship Ctn. Qty.
For Bare Ground Wire - Bronze Alloy			
2504	1/2" - 1"	No. 2 Str./No. 10 Sol.	25
2505	1-1/4" - 2"	No. 2 Str./No. 10 Sol.	25
For Bare Armored Ground Wire - Bronze Alloy			
2507	1/2" - 1"	No. 6 Str./No. 10 Sol.	25
2508	1-1/4" - 2"	No. 6 Str./No. 10 Sol.	25
For 1/2" Rigid Conduit - Bronze Alloy			
2512	1/2" - 1"	No. 6 Str./No. 10 Sol.	25
2522	1-1/4" - 2"	No. 6 Str./No. 10 Sol.	25
For 3/4" Rigid Conduit - Bronze Alloy			
2513	1/2" - 1"	No. 2 Str./No. 10 Sol.	25
2523	1-1/4" - 2"	No. 2 Str./No. 10 Sol.	25

Distributed by:

HUBBELL® RACO®
A Division of Hubbell Incorporated (Delaware)

3902 West Sample St. P.O. Box 4002
South Bend, IN 46619-4002
TEL: 574-234-7151 FAX: 574-234-0625
www.hubbell-raco.com

2011 Hubbell Incorporated (Delaware)