CUSTOMER APPROVAL

APPROVED BY:_____

DATE:_____

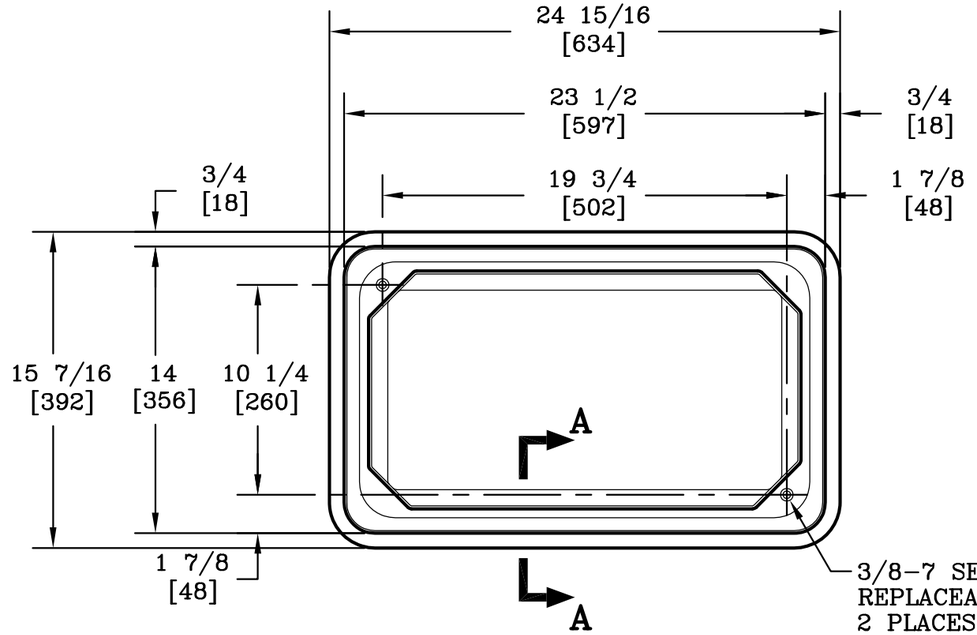

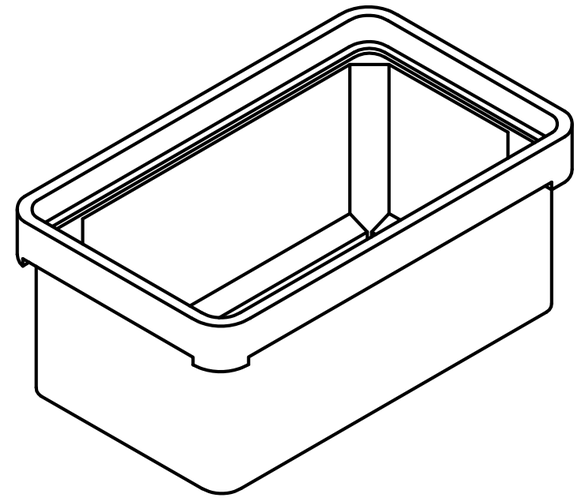

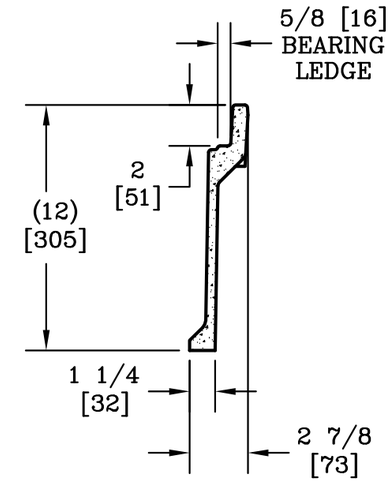

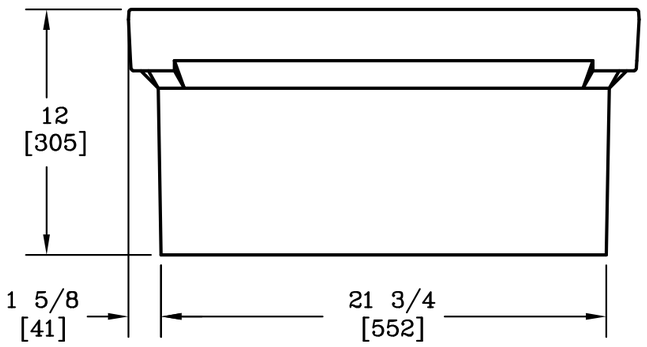

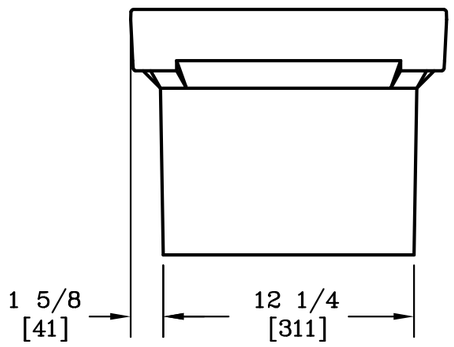

SECTION A–A

NOTE:

1. THIS BOX IS RATED FOR ANSI/SCTE 77 2010 TIER 22.

UL® LISTED

DIMENSIONS ARE IN INCHES OR MILLIMETERS IN BRACKETS UNLESS OTHERWISE NOTED.

	BY	DATE
DRN	WRT	11/10/89
CHK	MEF	12/15/89
ENG	MS	12/15/89
APR	FMS	12/15/89
APR	VJB	12/15/89

WEIGHT 51# 23kg

SCALE 1 1/2"=1'

SIZE B

HUBBELL®
3621 INDUSTRIAL PARK DR
LENOIR CITY, TN 37771
800-346-3062
www.quazite.com

LOC LC S

DRAWING DESCRIPTION
QUAZITE® BOX
13 X 24 X 12

REV F

3/12

PROJECT NUMBER 89346

SHEET 1 OF 1

DRAWING NUMBER PG1324BA12