H-MOSS® Controls

Load:Logic™ Plug Load Control

Heavy Duty Dual Load Controller with Integrated Wireless Receiver

HUBBELL

LUTRON Clear Connect™ Enabled

Features

- Two circuit 20 amp relay to switch circuits for multiple load controls
- Receives input from up to 10 wireless transmitters
- Fail to "ON" if paired transmitter goes missing

Ordering Information

Description	Device Color	UPC Number	Catalog Number
Receives wireless signals and controls its assigned circuits (2) of receptacles	Black	783585256184	WLC302

Listings

FCC, IC Certified
CEC Title 24 Compliant
UL/cUL 916 Listed for Energy Management
UL2043 plenum rated per NEC® 2014 300.22(C)(3)

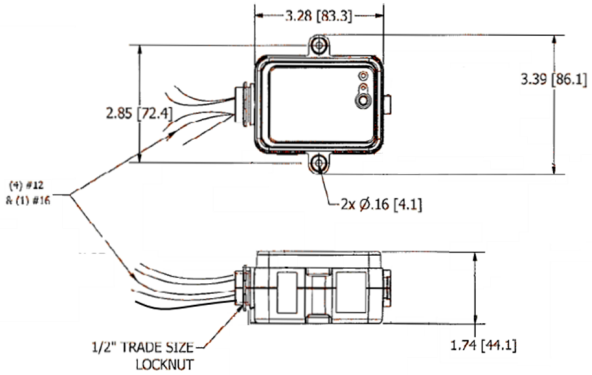

Specifications

Range (Standard/Obstructed)	30 ft (10m)
Range (Unobstructed line of sight)	60 ft (30m)
Operation	434MHz "quiet" FCC band
Housing	Flame retardant UL 94-5VA thermoplastic
Dimensions	4.00"L x 3.4"W x 1.73"H
Hardware	Included

Performance

Electrical

Circuits Controlled	Two (2)
Load Capacity	20A, 100-277V; 1HP @ 120V AC; 2HP @ 240/277V
Power Supply	100-277V AC, 50/60Hz
Relay	Heavy duty; magnetic latching. Silver alloy contacts. Very low standby power consumption

Environmental

Flammability	UL 94-5VA
Operating Temperatures	-40°F (-40 °C) to 149°F (65 °C). Below 32°F (0°C) must use suitably rated non-metallic enclosure. 0% to 90% humidity, non-condensing.

Complementary Products

Wireless Status Transmitter	WLCA
HD load controller with integrated wireless transmitter	WLCU301
Wireless Wall Switch	WLS1278W
Occupancy Sensors	ATD2000C, ATD1600W
Straight Blade Receptacles	5262W, 5362W, DR15WHI, DR20WHI
Permanent Marking Labels	CL60
Additional Information	See H-MOSS® section in our eCatalog for more energy management solutions

Online Resources

Customer Use Drawing
eCatalog
Installation Instructions

Dimensions in Inches (mm)

Hubbell Wiring Device-Kellems • Hubbell Incorporated (Delaware) • 40 Waterview Drive • Shelton, CT 06484
Phone (800) 288-6000 • Fax (800) 255-1031 • Specifications subject to change without notice.

HUBBELL® Wiring Device-Kellems