Floor Boxes

SystemOne Recessed 2 Gang Furniture Feed Floor Box Cover

For Use In Raised Access and Wood Floors

Features

- 180 degree cover opening to lay flat and reduce tripping hazards
- Two large cable egress doors
- Die cast aluminum cover construction for enhanced durability
- ADA Compliant

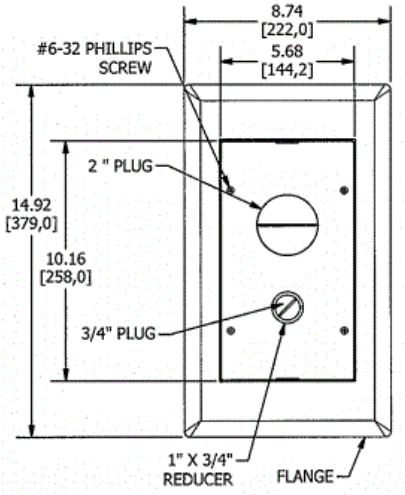

Ordering Information

- Compatible with AFB2G25 and AFB2G50
- Flush style typical applications: Tile, Finished Concrete, Terrazo

Catalog Number	UPC Number	Style	Finish
2GAFBFFCVRBK	783585446455	Raised Access / Wood	Black Powder Coat

Dimensions	Floor Finish Insert
8-3/4 x 14-15/16 in.	No

Specifications

Cover Material	Aluminum
Flange height	0.25 in.
Adjustment Range	0 - 1.0 inch
Load Rating	800 lbs. (w/ 2x safety factor)
Power Opening	1 in.
Low Voltage Opening	2 in.

Online Resources

Customer Use Drawing
eCatalog
Installation Instructions

Dimensions in Inches (mm)

Hubbell Wiring Device-Kellems • Hubbell Incorporated (Delaware) • 40 Waterview Drive • Shelton, CT 06484
Phone (800) 288-6000 • Fax (800) 255-1031 • Specifications subject to change without notice.

Wiring Device-Kellems