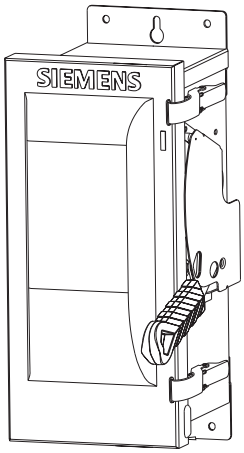

Heavy Duty Safety Switch

Type VBII, 60 Amp, Type 4/4X (Stainless Steel)

Standards and Ratings
- UL Listed under file #E4776
- Meets UL98 for switches and UL 50 for enclosures
- Meets NEMA Standard KS-1 for enclosed switches
- Meets NEC wire bending space requirements
- Rated 10,000 AIC with Class H fuses or 200,000 AIC with Class R and J fuses
- Rated 100,000 AIC at 600Vdc with Class R or J fuses
- I^2t rated (Amps^2 x Seconds = 200,000)
- 12X overload current rating exceeds 10X industry standard
- Suitable for use as service entrance equipment

Features
- Quick-make and break switching action
- Double break visible blade design
- Highly visible ON/OFF indication
- Rugged installer friendly enclosure design
- Modular design allows quick and easy replacement of parts
- Front removable lugs which can easily be converted to copper body or compression type lugs
- Defeatable dual cover interlock

General Information

Catalog Number	Volts	Description	Shipping Weight (lbs.)
HF222S	240	2 Pole, 2 Wire, Fusible	19
HF322S	240	3 Pole, 3 Wire, Fusible	20
HF322SS [6]	240	3 Pole, 3 Wire, Fusible	20
HF262S	600	2 Pole, 2 Wire, Fusible	20
HF362S	600	3 Pole, 3 Wire, Fusible	20
HF362SS [6]	600	3 Pole, 3 Wire, Fusible	20
HNF262S	600	2 Pole, 2 Wire, Non-Fusible	20
HNF362S	600	3 Pole, 3 Wire, Non-Fusible	19
HNF362SS [6]	600	3 Pole, 3 Wire, Non-Fusible	19

Horsepower Ratings [1] [2] - 240 Volts

Catalog Number	1 Phase, 240V AC		3 Phase, 240V AC		250V DC
	Std	Max	Std	Max	
HF222S	3	10	7½	15	10
HF322S & HF322SS	3	10	7½	15	10

Horsepower Ratings [1] [2] [3] - 600 Volts

Catalog Number	1 Phase, 480V AC		3 Phase, 600V AC		600V DC
	Std	Max	Std	Max	
HF262S	—	— [4]	—	— [4]	30
HF362S & HF362SS	15	30 [4]	15	50	25
HNF262S	—	— [4]	—	— [4]	30
HNF362S [5] & HNF362SS	—	50	—	60	25

1 Dual horsepower ratings: Std - applies when non-time delay fuses are installed. Max - applies when time-delay fuses are installed.
2 Horsepower ratings listed also apply to Design E motors with no derating.
3 Also rated 10HP at 250V DC.
4 Also rated 20HP at 480V and 25HP at 600V, 1 phase.
5 Also rated 20HP on 3Ø, 240V AC systems.
6 The enclosure of catalog numbers HF322SS, HF362SS and HNF362SS is constructed from 316 grade stainless steel.

Product Specification Sheet HD60.4

Answers for industry.

SIEMENS

Product Specification Sheet #HD60.4 (page 2 of 3)

Accessories

Catalog Number	Description
HA161234	One Normally Open and Closed Auxiliary Switches
HA261234	Two Normally Open and Closed Auxiliary Switches
HA361234	Low Voltage Auxiliary Switch
HG61234	Equipment Ground Lug Kit
HG261234	Isolated Equipment Ground Lug Kit
HP62	Fuse Puller (3 per kit) (HF262S, HF222S, HF322S, HF362S)
HN623	Neutral Kit
HR612	240 Volt Class R Fuse Clip Kit (3 fuse clips per kit) (HF222S, HF322S)
HR62	600 Volt Class R Fuse Clip Kit (3 fuse clips per kit) (HF262S, HF362S)
HLC612	Copper Lug Kit (9 lugs per kit)
HCL623	Compression Lug Neutral Barrier Kit
SSH075	0.75" Type 4/4X Hub
SSH100	1.00" Type 4/4X Hub
SSH125	1.25" Type 4/4X Hub

Replacement Parts

Catalog Number	Description
HFB22	Fusible 240 Volt Line Side Replacement Base (HF222S, HF322S)
HBB22	Fusible 240 Volt Load Side Replacement Base (HF222S, HF322S)
HFB62	Fusible 600 Volt Line Side Replacement Base (HF262S, HF362S)
HBB62	Fusible 600 Volt Load Side Replacement Base (HF262S, HF362S)
HNB623	Non-Fusible 600 Volt Replacement Base (HNF262S, HNF362S)
HH6123S	Replacement Handle/Handle Guard
HL612	Replacement Lugs (3 lugs per kit)
HM6123S	Replacement Mechanism
[1]	Replacement Door

Mechanical Lug Wire Ranges (60/75°C, Cu/Al)

Description	Wire Range
Line, Load Neutral	#12-2 AWG (Al) or #14-2 AWG (Cu)
Ground	#14-4 AWG

Compression LugS [2]

Wire Size	Burndy		Thomas-Betts		Ilsco	
	CU Only	CU/AL	CU Only	CU/AL	CU Only	CU/AL
#14-10			256-30695-1352	60097		
#8	YA8C-L1 BOX YA8C-TC14	YA8CA3	54130 54930BE	60102 61102		ACL-8
#6	YA6C-L BOX YA6C	YA6CA1	54105 54905BE	60107 61107	CRB-6 CRB-6L	ACL-6
#4			54106	61112	CRB-4	

[1] Place "DOOR" at the end of the switch catalog number.
[2] If compression lugs are used for the neutral, order compression lug neutral barrier kit HCL623.

Product Specification Sheet #HD60.4 (page 3 of 3)

Dimension Drawing

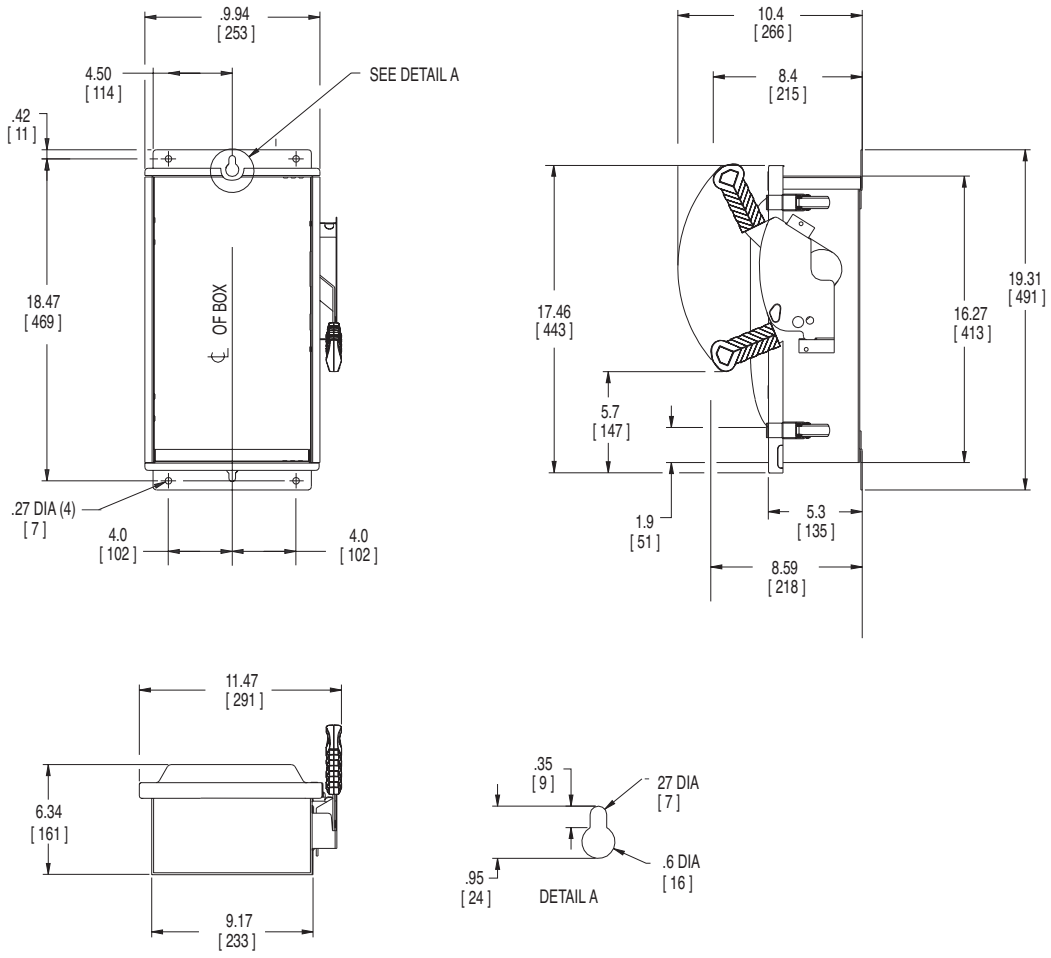

	LINE SIDE WIRE BEND	LOAD SIDE WIRE BEND
240V Fused	3.54 (90)	6.07 (154)
600V Fused	3.54 (90)	3.57 (91)
Non-Fused	3.54 (90)	8.68 (220)

No knockouts in the enclosure.
Dimensions shown in inches and millimeters ( ).
Dimension shown accurate to ± ⅛ inch.

HF222S, HF322S, HF262S, HF362S, HNF262S and HNF362S
Enclosure: 304 Stainless Steel
.055 Thick (17 Gauge)

HF322SS, HF362SS & HNF362SS
Enclosure: 316 Stainless Steel
.055 Thick (17 Gauge)

Siemens Industry, Inc.
Building Technologies Division
5400 Triangle Parkway
Norcross, GA 30092
1-800-964-4114

Subject to change without prior notice
All rights reserved
Printed in USA
© 2009 Siemens Industry, Inc.

Siemens is a registered trademark of Siemens AG. Product names mentioned may be trademarks or registered trademarks of their respective copanies. Specifications subject to change without notice.

www.usa.siemens.com/switches