VIEW SHOWN WITHOUT COVER

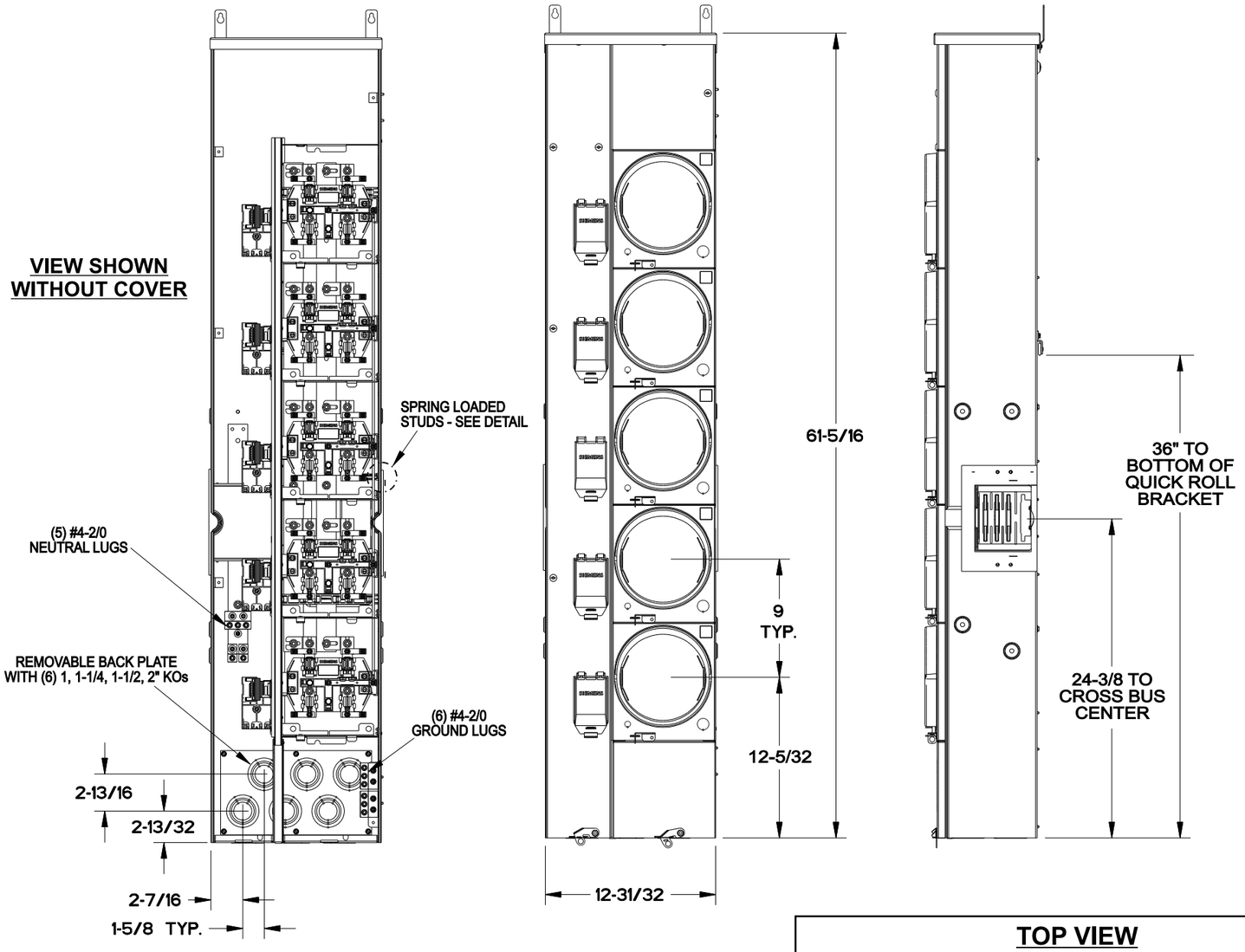

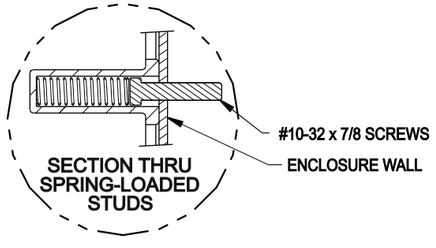

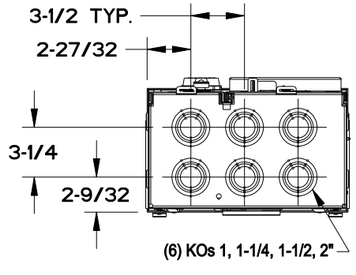

TOP VIEW

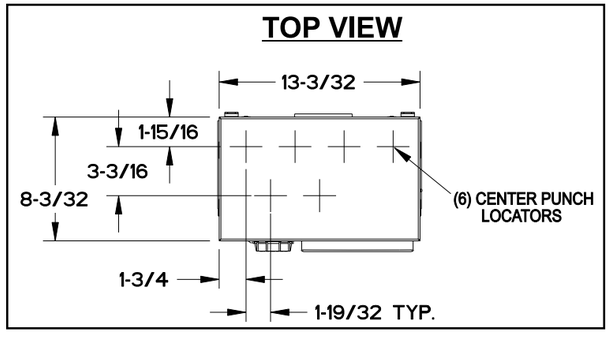

Catalog Numbers, Features and Ratings

- MAIN BUS RATING: 1200 AMPS 240V AC MAX.
- METER SOCKET RATING: 125 AMPS CONTINUOUS
- 65,000 AIC RATING MAX., 125 AMPS MAX. BRANCH RATING
- 1 PHASE INPUT / 1 PHASE OUTPUT
- TYPE 3R OUTDOOR ENCLOSURE
- MOUNTING RAILS AND ADJUSTABLE BRACKETS FOR SECURE MOUNTING
- CATALOG No. WITH RING TYPE COVER COMPLIES WITH EUSERC DWG No. 353

Catalog No.	Main Bus	Branch Rating	Meter Positions	Cover Type	Cover 5th Jaw	Horn Bypass
WMM51125	1 Phase	125A Max.	5	Ring		
WMM51125R	1 Phase	125A Max.	5	Ringless		
WMM51125RB	1 Phase	125A Max.	5	Ringless		Installed
WMM51125J	1 Phase	125A Max.	5	Ring	Installed	
WMM51125RJ	1 Phase	125A Max.	5	Ringless	Installed	
WMM51125RJB	1 Phase	125A Max.	5	Ringless	Installed	Installed

Additional Modules

FOR USE WITH: Module Description	Siemens Series#
Main Breakers	(W)MC, WB, WEB, WXB
Switches	WMP, WMS, WS, WES
Tap/Terminal Boxes	WMTB, WTB, WET, WT_PU
Pull Boxes	WMMB
Meter Module	(W)MM, WxMM, (W)MT, (W)ML, (W)MK
Meter Combinations	WC, WCL, WCT
Extension Box	WMEX, WSP, WSPD
Bussed Elbow	BE

Connect Modules Using:	Catalog Number / Torque
QuickConnect	QC1, Torque 400-440 lb-in (35-36 ft.-lb.)
Single Bolt Joint	SBJ1, Torque 400-480 lb-in (35-40 ft.-lb.)

ENLARGED SOCKET DETAIL

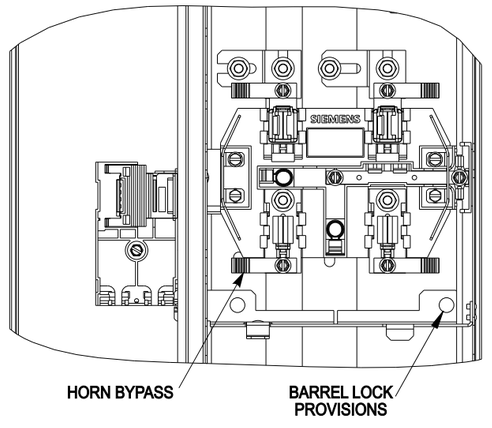

Accessories

Description	Catalog No.
Horn By-Pass Mod	ECMFH
End Closure Plate	WMEP
5th Jaw Mod	ECMF5
Meter Cover Plate	ECCP3
Meter Socket	ECMFS
125A Breaker Mounting	ECMFBM1
Meter Cover, Ring Type	ECMFMC
Meter Cover, Ringless	ECMFMCR
Parts Kit	ECMFPK
Load Cover Screws	ECMFCS
Bottom Pull Cover	ECMFC
Mounting Rail	MMRAIL
Mounting Clip	MMCLIP
Quick Phase Strap	ECMFPS
Breaker Cover Repl.	ECBC
Mounting Tabs (2)	ECMFTAB
Ground/Ntl Bar Kit	ECMFGN125
Ringless Conversion Kit	ECMMRLCK
Back Rail/Clip	ECMFWLCLIP
Wall Mounting Rail (60")	MMZR60
QP Breaker Retainer	ECMBR2
KO Plate with Knockouts	ECMMKOP
KO Plate w/o Knockouts	ECMMNKOP

Schematic

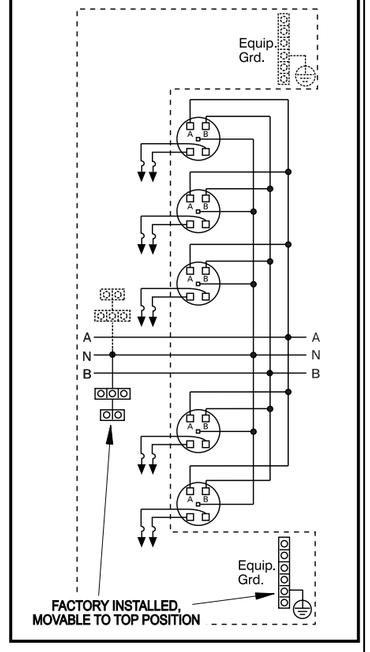

WMM51125RB SHOWN

© 2013 Copyright Siemens Industry, Inc.

SIEMENS
Siemens Industry, Inc.

PowerMod™ Meter Stack

Catalog Numbers: WMM51125, WMM51125R, WMM51125RB, WMM51125J, WMM51125RJ, WMM51125RJB

Size		Dwg. No.	125A_1Ph_5Pos	
B				
Dwn KAM	Date 5/29/13	DO NOT SCALE DRAWING	SHEET 1 OF 1	