SIEMENS

Data sheet 3RA2712-1CA00

Function module for AS-i, star-delta (wye-delta) start screw terminal, Installation on contactors 3RT2 Communication-capable contactor required

General technical data		
product brand name		Sirius
product designation		function module
design of the product		AS-i
size of contactor can be combined company-specific		S00, S0, S2, S3
protection class IP on the front acc. to IEC 60529		IP20
touch protection on the front acc. to IEC 60529		finger-safe, for vertical contact from the front
degree of pollution		3
insulation voltage with degree of pollution 3 at AC rated value	V	690
installation altitude at height above sea level maximum	m	2 000
ambient temperature		
● during storage	°C	-40 ... +80
● during operation	°C	-25 ... +60
● during transport	°C	-40 ... +80
EMC immunity acc. to IEC 60947-1		ambience A (industrial sector)
EMC emitted interference acc. to IEC 60947-1		CISPR11, ambience A (industrial sector)
conducted interference due to burst acc. to IEC 61000-4-4		2 kV network connection / 1 kV control connection
conducted interference due to conductor-earth surge acc. to IEC 61000-4-5		1 kV
conducted interference due to conductor-conductor surge acc. to IEC 61000-4-5		0.5 kV
electrostatic discharge acc. to IEC 61000-4-2		8 kV
field-based interference acc. to IEC 61000-4-3		10 V/m
shock resistance		11g / 15 ms
vibration resistance		10 ... 55 Hz / 0.35 mm
reference code		
● acc. to IEC 81346-2		K
● acc. to DIN EN 61346-2		K
suitability for use		
● direct starter		No
● star-delta starter		Yes
● reversing starter		No
Communication/ Protocol		
product function		
● bus communication		Yes
● control circuit interface with AS-interface		Yes

Subject to change without notice
© Copyright Siemens

Control circuit/ Control		
design of the surge suppressor		Varistor
type of voltage of the control supply voltage		DC
control supply voltage 1 at DC rated value	V	24
Installation/ mounting/ dimensions		
mounting position		any
fastening method		can be plugged into contactor
width	mm	45
height	mm	37
depth	mm	75
Connections/ Terminals		
product function removable terminal for auxiliary and control circuit		Yes
type of electrical connection for auxiliary and control circuit		screw-type terminals
type of connectable conductor cross-sections		
● for auxiliary contacts		
— solid		0.5 ... 4 mm², 2x (0.5 ... 2.5 mm²)
— finely stranded		
— with core end processing		1x (0.5 ... 2.5 mm²), 2x (0.5 ... 1.5 mm²)
● at AWG cables for auxiliary contacts		2x (20 ... 14)
Certificates/ approvals		
certificate of suitability		CE / UL / CSA

General Product Approval	Declaration of Conformity	Test Certificates
CSA, UL, EAC, EG-Konf.	Miscellaneous	Type Test Certificates/Test Report

Shipping Approval

ABS, BUREAU VERITAS, LRS, PRS, RINA, RMRS

other

ASi

Confirmation

Further information

Information- and Downloadcenter (Catalogs, Brochures,…)
https://www.siemens.com/ic10
Industry Mall (Online ordering system)
https://mall.industry.siemens.com/mall/en/en/Catalog/product?mlfb=3RA2712-1CA00
Cax online generator
http://support.automation.siemens.com/WW/CAXorder/default.aspx?lang=en&mlfb=3RA2712-1CA00
Service&Support (Manuals, Certificates, Characteristics, FAQs,...)
https://support.industry.siemens.com/cs/ww/en/ps/3RA2712-1CA00
Image database (product images, 2D dimension drawings, 3D models, device circuit diagrams, EPLAN macros, ...)
http://www.automation.siemens.com/bilddb/cax_de.aspx?mlfb=3RA2712-1CA00&lang=en

Subject to change without notice
© Copyright Siemens

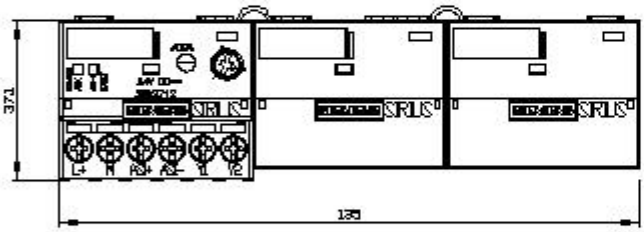

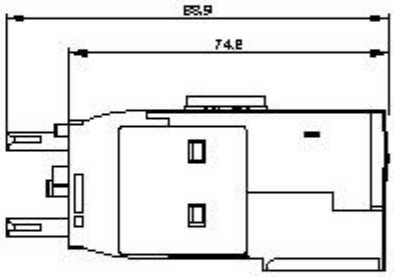

Subject to change without notice
© Copyright Siemens

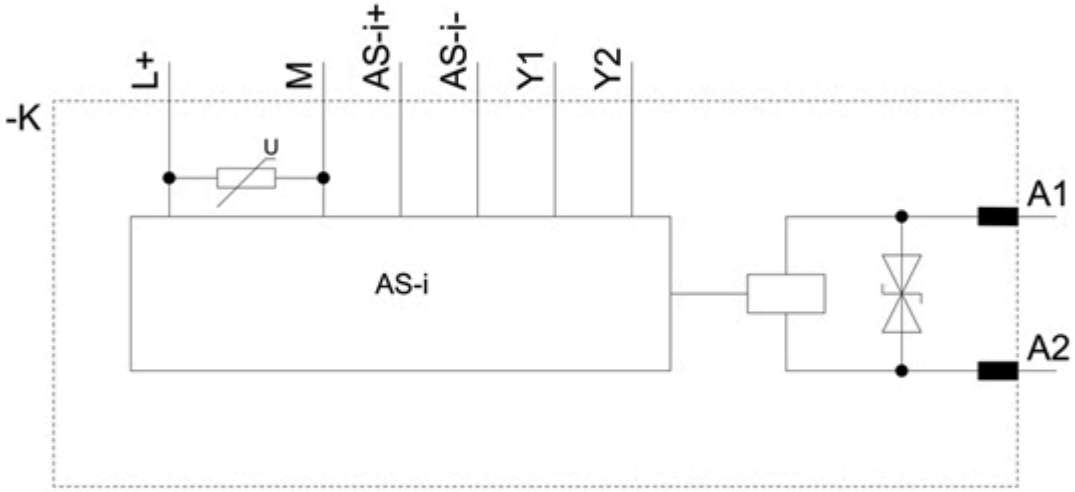

Subject to change without notice
© Copyright Siemens

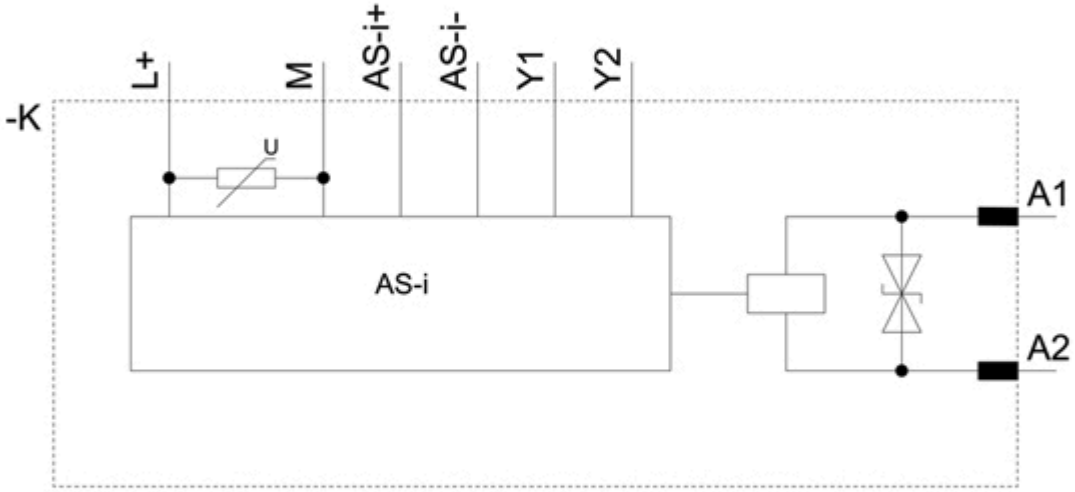

last modified: 12/15/2020

Subject to change without notice
© Copyright Siemens