SIEMENS

Data sheet 3RA2210-1FA15-2AK6

FUSELESS LOAD FEEDER REVERSING OPERATION, AC 400V, S00 3.5. . .5A, AC 110/120V 50/60HZ SCREW TERMINAL FOR RAIL MOUNTING, TYPE OF ASSIGNMENT 1,IQ = 150KA 1NC (CONTACTOR)

product brand name	SIRIUS
product designation	non-fused load feeders 3RA2
design of the product	reversing starter
manufacturer's article number	
● of the supplied contactor	3RT2015-1AK62
● of the supplied circuit-breakers	3RV2011-1FA10
● of the supplied link module	3RA1921-1DA00
General technical data	
size of the circuit-breaker	S00
size of load feeder	S00
product extension auxiliary switch	Yes
insulation voltage with degree of pollution 3 at AC rated value	690 V
degree of pollution	3
surge voltage resistance rated value	6 kV
shock resistance acc. to IEC 60068-2-27	6g / 11 ms
mechanical service life (switching cycles) of contactor typical	30 000 000
type of assignment	1
Substance Prohibitance (Date)	01.10.2009 00:00:00
Ambient conditions	
● ambient temperature during operation	-20 ... +60 °C
● ambient temperature during storage	-50 ... +80 °C
● ambient temperature during transport	-50 ... +80 °C
Main circuit	
number of poles for main current circuit	3
design of the switching contact	electromechanical
adjustable current response value current of the current-dependent overload release	3.5 ... 5 A
● operating voltage rated value	690 V
● operating voltage at AC-3 rated value maximum	690 V
operating frequency rated value	50 ... 60 Hz
operational current at AC-3 at 400 V rated value	3.6 A
operating power at AC-3	
● at 400 V rated value	1 500 W
● at 500 V rated value	2 200 W
● at 690 V rated value	3 000 W
Control circuit/ Control	

Subject to change without notice
© Copyright Siemens

control supply voltage at AC	
● at 50 Hz rated value	110 V
● at 60 Hz rated value	120 V
apparent holding power of magnet coil at AC	4.2 V·A
Protective and monitoring functions	
trip class	CLASS 10
design of the overload release	thermal (bimetallic)
response value current of instantaneous short-circuit trip unit	65 A
UL/CSA ratings	
full-load current (FLA) for 3-phase AC motor	
● at 480 V rated value	4.8 A
● at 600 V rated value	4.55 A
yielded mechanical performance [hp]	
● for single-phase AC motor	
— at 110/120 V rated value	0.17 hp
— at 230 V rated value	0.5 hp
● for 3-phase AC motor	
— at 200/208 V rated value	1 hp
— at 220/230 V rated value	1 hp
— at 460/480 V rated value	3 hp
— at 575/600 V rated value	3 hp
Short-circuit protection	
product function short circuit protection	Yes
design of the short-circuit trip	magnetic
conditional short-circuit current (Iq)	
● at 690 V acc. to IEC 60947-4-1 rated value	4 000 A
● at 400 V acc. to IEC 60947-4-1 rated value	153 000 A
● at 500 V acc. to IEC 60947-4-1 rated value	100 000 A
Installation/ mounting/ dimensions	
mounting position	vertical
fastening method	screw and snap-on mounting onto 35 mm standard mounting rail
height	170 mm
width	90 mm
depth	97.1 mm
required spacing	
● for grounded parts	
— forwards	0 mm
— backwards	0 mm
— upwards	20 mm
— at the side	9 mm
— downwards	10 mm
● for live parts	
— forwards	0 mm
— backwards	0 mm
— upwards	20 mm
— downwards	10 mm
— at the side	9 mm
Connections/ Terminals	
type of electrical connection for main current circuit	screw-type terminals
type of connectable conductor cross-sections	
● for main contacts stranded	0.5 ... 4 mm², 2x (0.75 ... 2.5 mm²)
● at AWG cables for main contacts	2x (20 ... 16), only for contactor 2x (18 ... 14), 2x 12
● connectable conductor cross-section for main contacts finely stranded with core end processing	0.5 ... 2.5 mm²
Safety related data	
B10 value with high demand rate acc. to SN 31920	1 000 000
proportion of dangerous failures with high demand rate	73 %

Subject to change without notice
© Copyright Siemens

acc. to SN 31920	
protection class IP on the front acc. to IEC 60529	IP20
touch protection on the front acc. to IEC 60529	finger-safe, for vertical contact from the front

Certificates/ approvals

General Product Approval	For use in hazardous locations	Declaration of Conformity
CSA, UL, EAC	ATEX	EG-Konf.

Miscellaneous

Test Certificates		Marine / Shipping			
Special Test Certificate	Type Test Certificates/Test Report	ABS	BUREAU VERITAS	LRS	PRS

Marine / Shipping			other	Railway
RINA	RMRS	DNV·GL	Confirmation	Vibration and Shock

Further information

Information- and Downloadcenter (Catalogs, Brochures,…)
https://www.siemens.com/ic10
Industry Mall (Online ordering system)
https://mall.industry.siemens.com/mall/en/en/Catalog/product?mlfb=3RA2210-1FA15-2AK6
Cax online generator
http://support.automation.siemens.com/WW/CAXorder/default.aspx?lang=en&mlfb=3RA2210-1FA15-2AK6
Service&Support (Manuals, Certificates, Characteristics, FAQs,...)
https://support.industry.siemens.com/cs/ww/en/ps/3RA2210-1FA15-2AK6
Image database (product images, 2D dimension drawings, 3D models, device circuit diagrams, EPLAN macros, ...)
http://www.automation.siemens.com/bilddb/cax_de.aspx?mlfb=3RA2210-1FA15-2AK6&lang=en
Characteristic: Tripping characteristics, I^2t, Let-through current
https://support.industry.siemens.com/cs/ww/en/ps/3RA2210-1FA15-2AK6/char
Further characteristics (e.g. electrical endurance, switching frequency)
http://www.automation.siemens.com/bilddb/index.aspx?view=Search&mlfb=3RA2210-1FA15-2AK6&objecttype=14&gridview=view1

Subject to change without notice
© Copyright Siemens

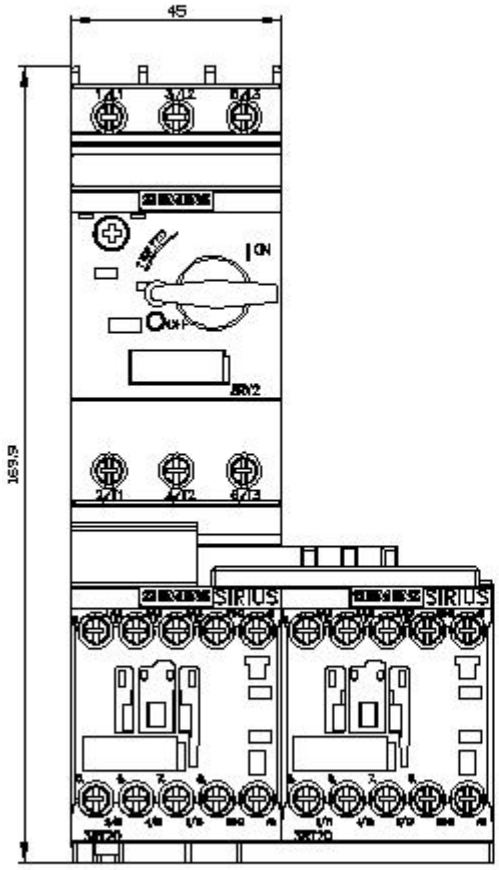

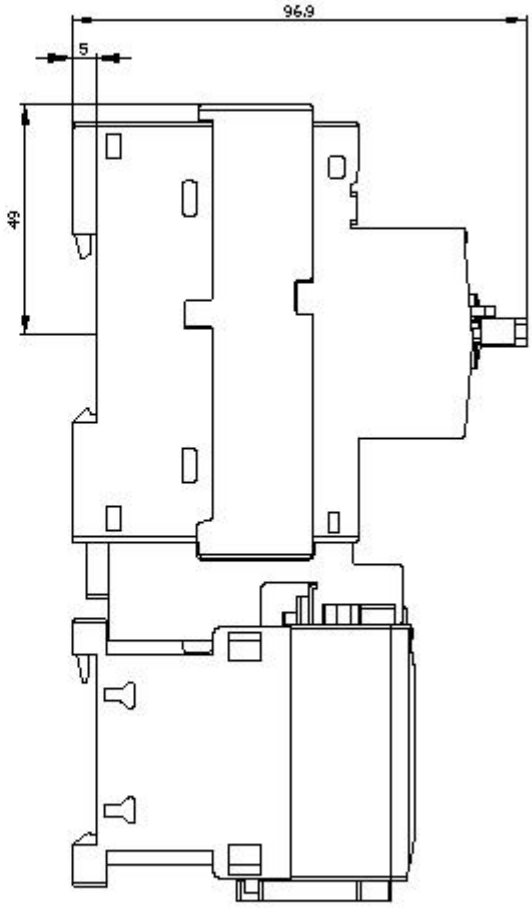

Subject to change without notice
© Copyright Siemens

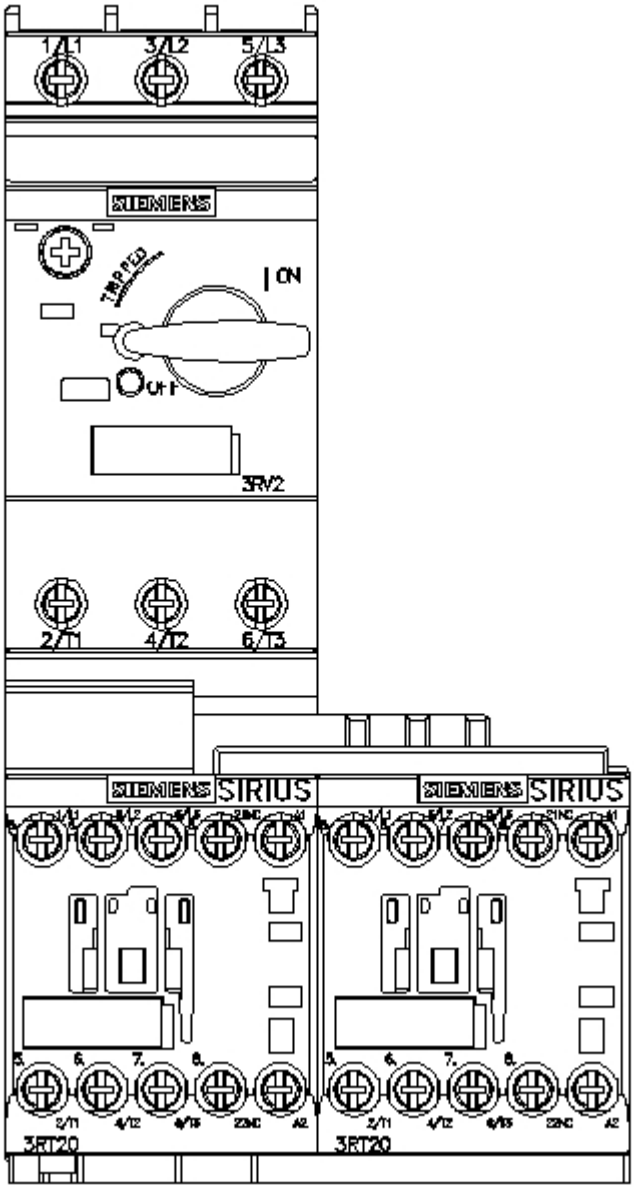

Subject to change without notice
© Copyright Siemens

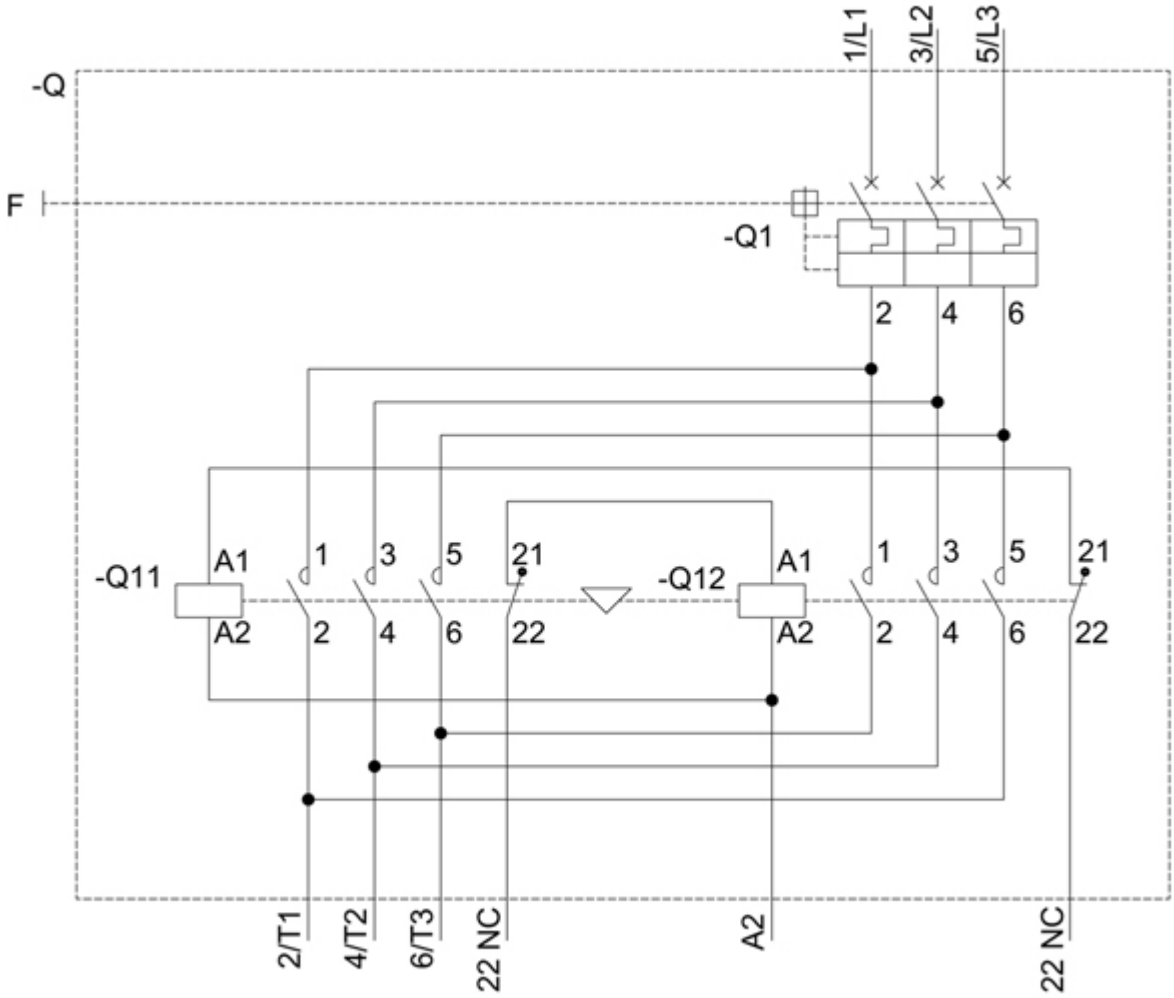

last modified: 12/15/2020

Subject to change without notice
© Copyright Siemens