SIEMENS

Data sheet 3SU1103-0AB50-1FA0-Z Y10

Illuminated pushbutton, 22 mm, round, plastic, blue, pushbutton, flat, momentary contact type, with holder, 1 NO+1 NC, LED module with integrated LED 110 V AC, screw terminal, with laser labeling, upper case and lower case, always upper case at beginning of line

product brand name	SIRIUS ACT
product designation	Illuminated pushbuttons
design of the product	Complete unit
product type designation	3SU1
product line	Plastic, black, 22 mm
manufacturer's article number	
● of supplied contact module at position 1	3SU1400-1AA10-1FA0
● of supplied LED module	3SU1401-1BC50-1AA0
● of the supplied holder	3SU1500-0AA10-0AA0
● of the supplied actuator	3SU1001-0AB50-0AA0
number of command points	1
Actuator	
design of the actuating element	Button, flat
principle of operation of the actuating element	momentary contact type
product extension optional light source	Yes
color of the actuating element	blue
material of the actuating element	plastic
shape of the actuating element	round
outer diameter of the actuating element	29.45 mm
marking of the actuating element	Customized labeling, text in lower case / capital letters, all lines start with capital letter
number of contact modules	1
Front ring	
product component front ring	Yes
design of the front ring	Standard
material of the front ring	plastic
color of the front ring	black
Holder	
material of the holder	Plastic
Display	
number of LED modules	1
General technical data	
product function positive opening	Yes
product component light source	Yes
insulation voltage rated value	320 V
degree of pollution	3
type of voltage of the operating voltage	AC/DC

Subject to change without notice
© Copyright Siemens

surge voltage resistance rated value	4 kV
protection class IP	IP66, IP67, IP69(IP69K)
● of the terminal	IP20, clamping screw tightened
degree of protection NEMA rating	1, 2, 3, 3R, 4, 4X, 12, 13
shock resistance	
● acc. to IEC 60068-2-27	Sinusoidal half-wave 50g / 11 ms
● for railway applications acc. to DIN EN 61373	Category 1, Class B
vibration resistance	
● acc. to IEC 60068-2-6	10 ... 500 Hz: 5g
● for railway applications acc. to DIN EN 61373	Category 1, Class B
operating frequency maximum	3 600 1/h
mechanical service life (switching cycles) typical	3 000 000
electrical endurance (switching cycles) typical	10 000 000
thermal current	10 A
reference code acc. to IEC 81346-2	S
continuous current of the C characteristic MCB	10 A; for a short-circuit current smaller than 400 A
continuous current of the quick DIAZED fuse link	10 A
continuous current of the DIAZED fuse link gG	10 A
● operating voltage at AC	
— at 50 Hz rated value	5 ... 500 V
— at 60 Hz rated value	5 ... 500 V
● operating voltage at DC rated value	5 ... 500 V
Power Electronics	
contact reliability	One maloperation per 100 million (17 V, 5 mA), one maloperation per 10 million (5 V, 1 mA)
Supply voltage	
type of voltage of the supply voltage of the light source	AC
● supply voltage 1 of the light source at AC at 50 Hz rated value	110 V
● supply voltage 1 of the light source at AC at 60 Hz rated value	110 V
Control circuit/ Control	
inrush current of LED module maximum	3 A
Auxiliary circuit	
design of the contact of auxiliary contacts	Silver alloy
number of NC contacts for auxiliary contacts	1
number of NO contacts for auxiliary contacts	1
Connections/ Terminals	
type of electrical connection of modules and accessories	Screw-type terminal
type of connectable conductor cross-sections	
● solid with core end processing	2x (0.5 ... 0.75 mm²)
● solid without core end processing	2x (1.0 ... 1.5 mm²)
● finely stranded with core end processing	2x (0.5 ... 1.5 mm²)
● finely stranded without core end processing	2x (1,0 ... 1,5 mm²)
● at AWG cables	2x (18 ... 14)
tightening torque of the screws in the bracket	1 ... 1.2 N·m
● tightening torque with screw-type terminals	0.8 ... 0.9 N·m
Lamp	
type of light source	LED
color of the light source	blue
light intensity	280 ... 710 mcd
Ambient conditions	
● ambient temperature during operation	-25 ... +70 °C
● ambient temperature during storage	-40 ... +80 °C
environmental category during operation acc. to IEC 60721	3M6, 3S2, 3B2, 3K6 (with relative air humidity of 10 ... 95 %, no condensation in operation permitted for all devices behind front panel)
Installation/ mounting/ dimensions	

Subject to change without notice
© Copyright Siemens

fastening method	front panel mounting
● of modules and accessories	Front plate mounting
height	40 mm
width	30 mm
shape of the installation opening	round
mounting diameter	22.3 mm
positive tolerance of installation diameter	0.4 mm
mounting height	11 mm
installation width	29.5 mm
installation depth	71.7 mm

Certificates/ approvals

Further information

Information- and Downloadcenter (Catalogs, Brochures,…)
https://www.siemens.com/ic10
Industry Mall (Online ordering system)
https://mall.industry.siemens.com/mall/en/en/Catalog/product?mlfb=3SU1103-0AB50-1FA0-Z Y10
Cax online generator
http://support.automation.siemens.com/WW/CAXorder/default.aspx?lang=en&mlfb=3SU1103-0AB50-1FA0-Z Y10
Service&Support (Manuals, Certificates, Characteristics, FAQs,...)
https://support.industry.siemens.com/cs/ww/en/ps/3SU1103-0AB50-1FA0-Z Y10
Image database (product images, 2D dimension drawings, 3D models, device circuit diagrams, EPLAN macros, ...)
http://www.automation.siemens.com/bilddb/cax_de.aspx?mlfb=3SU1103-0AB50-1FA0-Z Y10&lang=en

Subject to change without notice
© Copyright Siemens

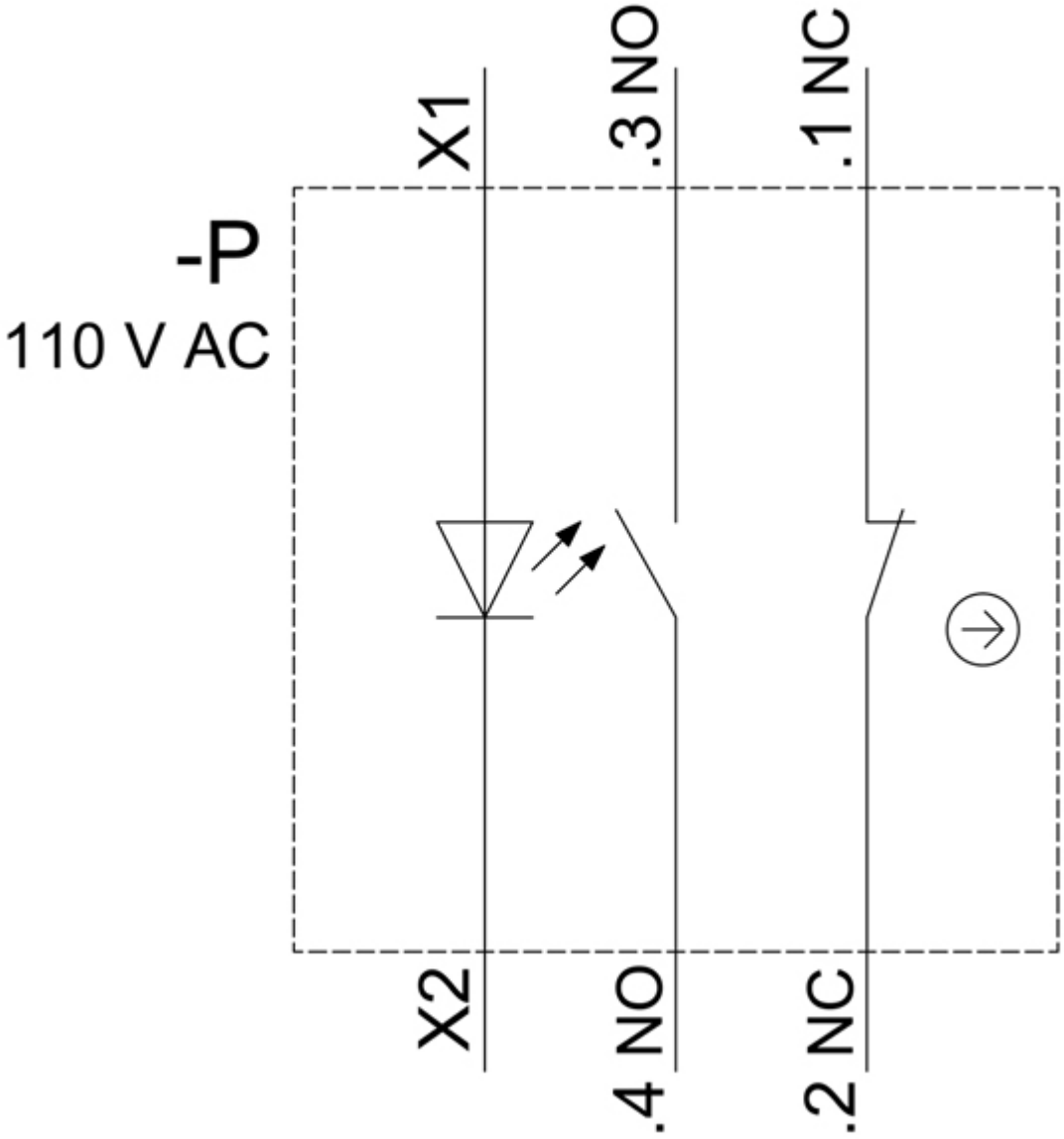

last modified: 12/17/2020

Subject to change without notice
© Copyright Siemens