SIEMENS

Data sheet 3SU1030-4GN01-0AA0-Z X90

Key-operated switch O.M.R, 22 mm, round, plastic with metal front ring, lock number 73038, blue, with 2 keys, 3 switch positions I-O<II, left latching, right momentary contact type, actuating angle 2x45°, 10:30h/12h/13:30h, Key removal O Z=50-unit packaging

product brand name	SIRIUS ACT
product designation	Key-operated switches
design of the product	Actuating/signaling element
product type designation	3SU1
product line	Plastic with metal front ring, matt, 22 mm
manufacturer's article number of included key	3SU1950-0FJ50-0AA0
Actuator	
principle of operation of the actuating element	latching/momentary contact, 2x45° (10:30 h/12 h/13:30 h), return from right, left latching
product extension optional light source	No
color	
● of the actuating element	blue
material of the actuating element	metal
shape of the actuating element	Key
outer diameter of the actuating element	29.5 mm
number of switching positions	3
switch position for key distraction	O
actuating angle	
● clockwise	45°
● anticlockwise	45°
lock make	O.M.R.
key number	73038
Front ring	
product component front ring	Yes
design of the front ring	Standard
material of the front ring	Metal, matt
color of the front ring	sand gray
General technical data	
protection class IP	IP66, IP67, IP69(IP69K)
● of the terminal	IP20
degree of protection NEMA rating	1, 2, 3, 3R, 4, 4X, 12, 13
shock resistance	
● acc. to IEC 60068-2-27	Sinusoidal half-wave 50g / 11 ms
● for railway applications acc. to DIN EN 61373	Category 1, Class B
vibration resistance	
● acc. to IEC 60068-2-6	10 ... 500 Hz: 5g
● for railway applications acc. to DIN EN 61373	Category 1, Class B
operating frequency maximum	1 800 1/h

Subject to change without notice
© Copyright Siemens

mechanical service life (switching cycles) typical	1 000 000
reference code acc. to IEC 81346-2	S
Ambient conditions	
• ambient temperature during operation	-25 ... +70 °C
• ambient temperature during storage	-40 ... +80 °C
environmental category during operation acc. to IEC 60721	3M6, 3S2, 3B2, 3C3, 3K6 (with relative air humidity of 10 ... 95 %)
Installation/ mounting/ dimensions	
height	29.5 mm
width	29.5 mm
shape of the installation opening	round
mounting diameter	22.3 mm
positive tolerance of installation diameter	0.4 mm
mounting height	51.7 mm
installation width	29.5 mm
installation depth	25.4 mm
Certificates/ approvals	
Further information	

Information- and Downloadcenter (Catalogs, Brochures,…)
https://www.siemens.com/ic10
Industry Mall (Online ordering system)
https://mall.industry.siemens.com/mall/en/en/Catalog/product?mlfb=3SU1030-4GN01-0AA0-Z X90
Cax online generator
http://support.automation.siemens.com/WW/CAXorder/default.aspx?lang=en&mlfb=3SU1030-4GN01-0AA0-Z X90
Service&Support (Manuals, Certificates, Characteristics, FAQs,...)
https://support.industry.siemens.com/cs/ww/en/ps/3SU1030-4GN01-0AA0-Z X90
Image database (product images, 2D dimension drawings, 3D models, device circuit diagrams, EPLAN macros, ...)
http://www.automation.siemens.com/bilddb/cax_de.aspx?mlfb=3SU1030-4GN01-0AA0-Z X90&lang=en

Subject to change without notice
© Copyright Siemens

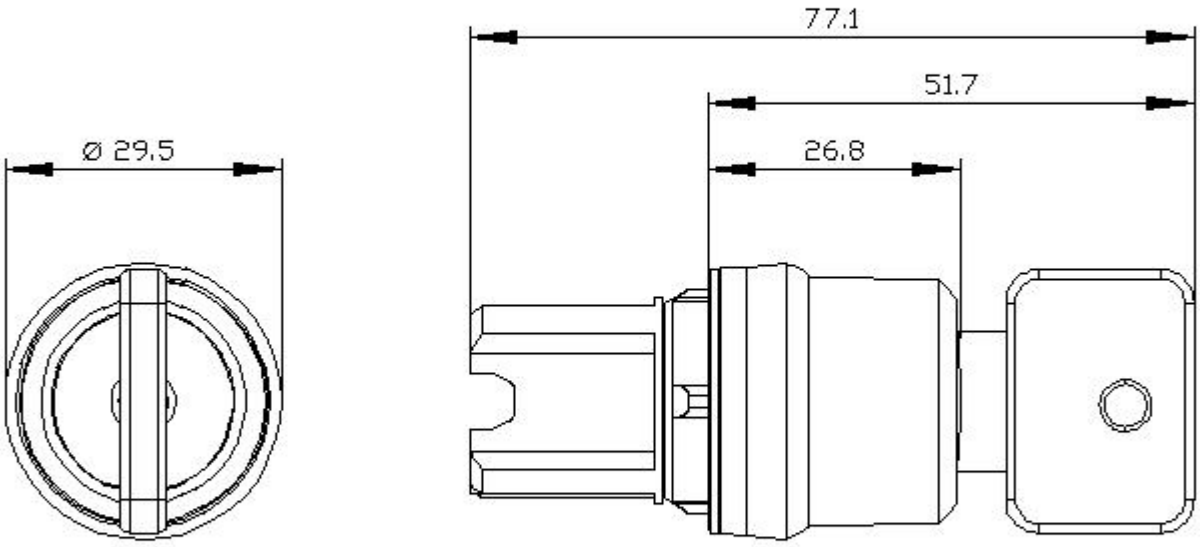

last modified: 2/1/2021

Subject to change without notice
© Copyright Siemens