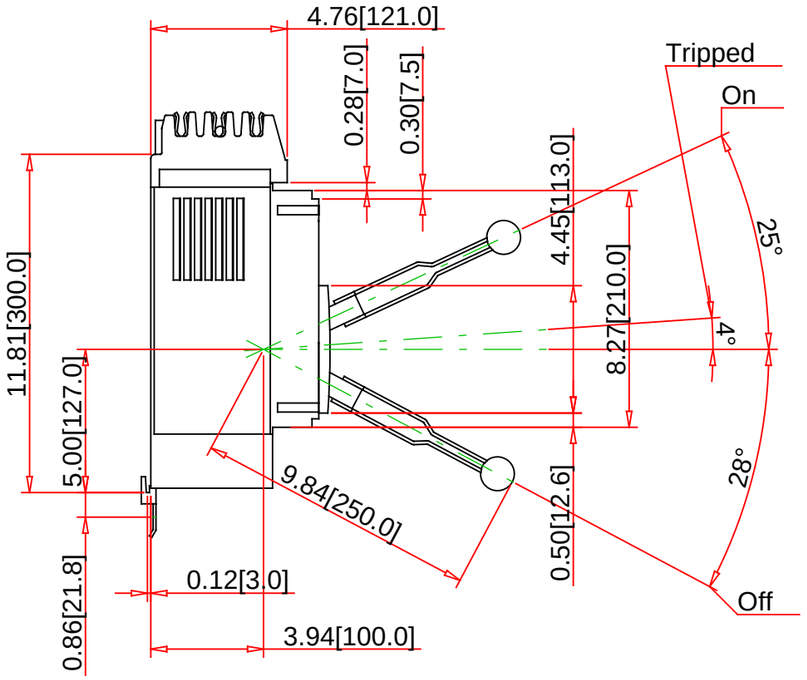

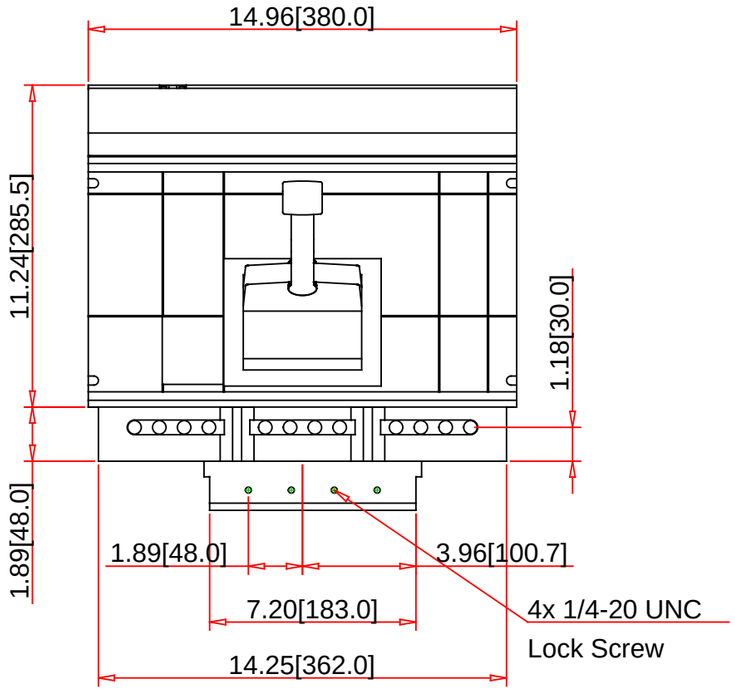

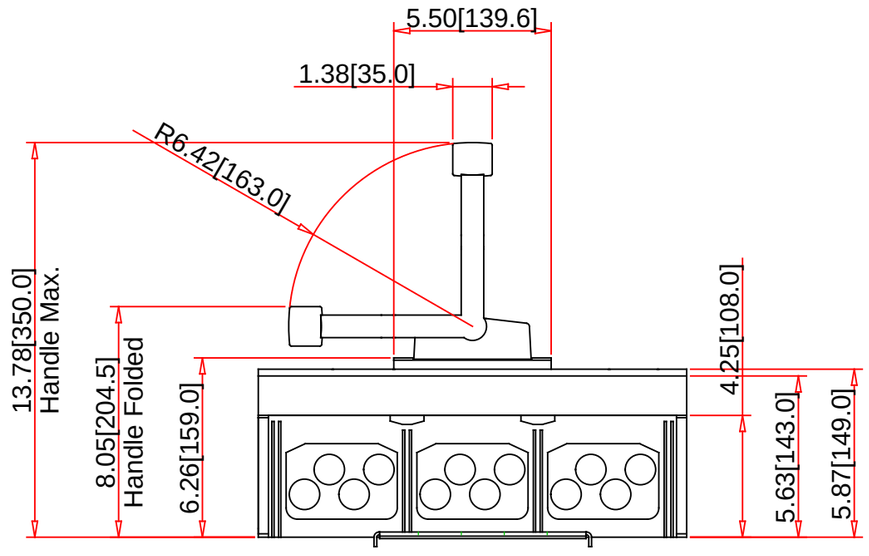

Note:
- Drawings Not To Scale
- Drawings Subject to Change Without Notice
- Dimensions are inches next to [Millimeters]

Part No.:

RLA36100CU44A

SQUARE D by Schneider Electric

Schneider Electric United States
North American Division
Boston One Campus
800 Federal Street
Andover, MA 01810, USA
Phone:+1 8773425173
Email: CCC@us.schneider-electric.com

Technical Information:

General Application:	Provides overload and short circuit protection
For Use With:	I-Line Panelboards and Switchboards
Approvals:	UL Listed - CSA Certified - IEC Rated
Mounting Type:	I-Line Plug-On
Terminal Type:	I-Line Connection (ON end) - Lugs (OFF end)
Wire Size:	(4) 3/0 through 600 kcmil Al or Cu
Weight:	
Depth:	
Height:	
Width:	
Mounting Height:	

Specification:

Description:	PowerPact R-frame Molded Case Circuit Breaker
Number of Poles:	3-Pole
Ampere Rating:	1000A
Voltage Rating:	600VAC
Interrupting Rating:	125kA at 240VAC - 100kA at 480VAC - 50kA at 600VAC
Circuit Breaker Rating:	100% Rated
Fixed AC Magnetic Trip:	