Product data sheet
Characteristics

BRS366H030ABA
3-phase stepper motor - 1.02Nm - shaft Ø6.35mm -L=56mm - without brake -term box

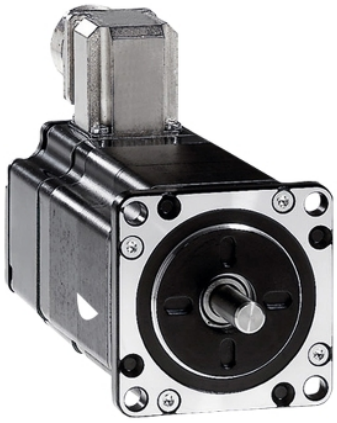

Main

Range Compatibility	Lexium SD3
Product or Component Type	Motion control motor
Device short name	BRS3
Maximum mechanical speed	3000 rpm
Motor Type	3-phase stepper motor
Number of motor poles	6
Supply voltage limits	34 V DC 48 V DC
Mounting Support	Flange
Motor flange size	2.25 in (57.2 mm)
Length	3.66 in (93 mm)
Centring collar diameter	1.50 in (38 mm)

Complementary

Centring collar depth	0.06 in (1.6 mm)
Number of mounting holes	4
Mounting holes diameter	0.20 in (5.2 mm)
Circle diameter of the mounting holes	2.62 in (66.6 mm)
Electrical Connection	Terminal box
Holding brake	Without
Shaft end	Smooth shaft
Second shaft	Without second shaft end
Shaft diameter	0.25 in (6.35 mm)
Shaft length	0.83 in (21 mm)
Nominal torque	7.97 lbf.in (0.9 N.m)
Holding torque	9.03 lbf.in (1.02 N.m)
Rotor inertia	0.22 kg.cm²
Resolution	1.8 °, 0.9 °, 0.72 °, 0.36 °, 0.18 °, 0.09 °, 0.072 °, 0.036 ° step angle 200, 400, 500, 1000, 2000, 4000, 5000, 10000 steps number of full steps per revolution
Accuracy error	+/- 6 arc min
Maximum starting frequency	8 kHz
Line Rated Current	5.8 A
Resistance	0.5 Ohm winding)
Time constant	3.3 ms
Maximum radial force Fr	25 N second shaft end) 24 N first shaft end)
Maximum axial force Fa	100 N tensile force) 8.4 N force pressure)
Service life in hours	20000 h bearing)
Angular acceleration	200000 rad/s²
Net Weight	3.53 lb(US) (1.6 kg)

The information provided in this documentation contains general descriptions and/or technical characteristics of the performance of the products contained herein.
This documentation is not intended as a substitute for and is not to be used for determining suitability or reliability of these products for specific user applications.
It is the duty of any such user or integrator to perform the appropriate and complete risk analysis, evaluation and testing of the products with respect to the relevant specific application or use thereof.
Neither Schneider Electric Industries SAS nor any of its affiliates or subsidiaries shall be responsible or liable for misuse of the information contained herein.

Environment

Standards	IEC 60072-1 EN 50347
Type of cooling	Natural convection
Ambient Air Temperature for Operation	-13…104 °F (-25…40 °C)
Ambient Air Temperature for Storage	-13…158 °F (-25…70 °C)
Operating altitude	<= 3280.84 ft (1000 m) without power derating
Relative humidity	15…85 % without condensation
Vibration resistance	20 m/s² maximum A EN/IEC 60034-14
IP degree of protection	Total except shaft bushing IP56 EN/IEC 60034-5 Shaft bushing without shaft seal ring IP41 EN/IEC 60034-5
Temperature class	F winding IEC/EN 60034-1

Ordering and shipping details

Category	18284-STEPPER MOTORS
Discount Schedule	PC55
GTIN	3606485152431
Nbr. of units in pkg.	1
Package weight(Lbs)	2.55 lb(US) (1.158 kg)
Returnability	No
Country of origin	DE

Packing Units

Unit Type of Package 1	PCE
Package 1 Height	9.65 in (24.5 cm)
Package 1 width	9.65 in (24.5 cm)
Package 1 Length	9.65 in (24.5 cm)
Unit Type of Package 2	P06
Number of Units in Package 2	36
Package 2 Weight	110.65 lb(US) (50.188 kg)
Package 2 Height	30.31 in (77 cm)
Package 2 width	31.50 in (80 cm)
Package 2 Length	23.62 in (60 cm)

Offer Sustainability

Sustainable offer status	Green Premium product
California proposition 65	WARNING: This product can expose you to chemicals including: Lead and lead compounds, which is known to the State of California to cause cancer and birth defects or other reproductive harm. For more information go to www.P65Warnings.ca.gov
REACh Regulation	REACh Declaration
EU RoHS Directive	Pro-active compliance (Product out of EU RoHS legal scope) EU RoHS Declaration
Mercury free	Yes
RoHS exemption information	Yes
China RoHS Regulation	China RoHS Declaration
Environmental Disclosure	Product Environmental Profile
WEEE	The product must be disposed on European Union markets following specific waste collection and never end up in rubbish bins.
PVC free	Yes

Contractual warranty

Warranty	18 months

BRS366H030ABA

Dimensions

3-Phase Stepper Motor in Terminal Box Version

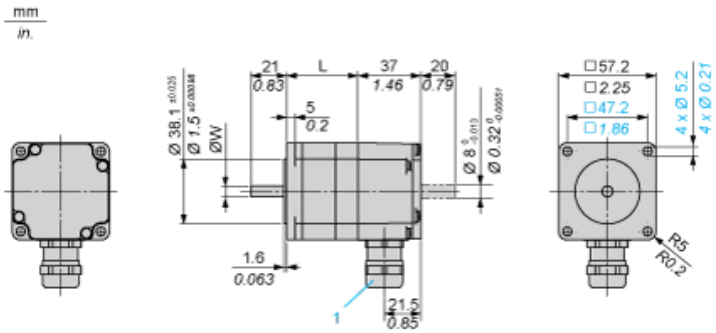

1 : Cable gland M20 x 1.5 for cable Ø 9 ... 13 mm / 0.35 ... 0.51 in.

Dimensions in mm

L	Shaft diameter ØW
56 ±0.5	6.35 ±0.013

Dimensions in in.

L	Shaft diameter ØW
2.20 ±0.020	0.25 ±0.00051

Torque Characteristics

Measurement at 1000 Steps/Revolution, Nominal Voltage DC Bus U_N and Phase Current I_N

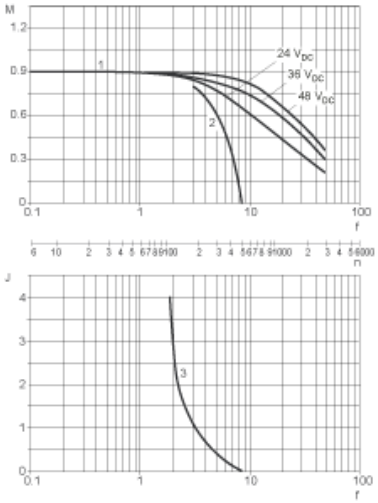

M : Torque in Nm
n : Speed in rpm
f : Frequency in kHz
J : Rotor inertia in $kg.cm^2$
1 : Pull-out torque
2 : Pull-in torque
3 : Maximum load inertia