TeSys B
Bar mounted contactors

Introduction

Applications	B10/2
Offer panorama	B10/4
Technology	B10/6

TeSys B Bar mounted contactors - Variable composition (composition is defined by customer)

Type of product	Range		Pages
CV1B - Standard performance - 690 V	From 80 to 700 A - AC-3 From 80 to 1000 A - AC-1		B10/10
CV3B - LC1B - High performance - 1000 V	From 80 to 1800 A - AC-3 From 80 to 2750 A - AC-1	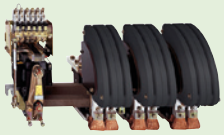	B10/20
Variable composition contactors - ordering process			B10/29

TeSys B Bar mounted contactors - Predefined composition

LC1B - High performance / power - 1000 V	From 750 to 1800 A - AC-3 From 800 to 2750 A - AC-1	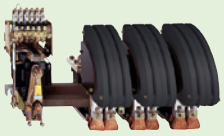	B10/32
CRXB, CVXB, CWXB - For control of DC excitation circuit of synchronous motors - 1200 V DC	From 80 to 2750 A - DC		B10/35
CR1B - Magnetic latching - 1000 V	From 750 to 1800 A - AC-3 From 800 to 2750 A - AC-1	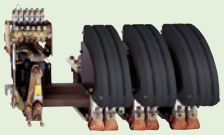	B10/40

Variable composition contactors – TeSys B

All details and composition list in the

TeSys B Bar mounted contactors dedicated catalogue >

Catalogue ref:
DIA1ED2070702EN

Click here to download

TeSys B Bar mounted contactors - from specification of customer's application

Excitation circuit of synchronous motor, magnetic latching, furnaces and induction heating applications, tramways rails grounding... CF452 - Customer requirements specification form	From 80 to 16300 A - AC-1	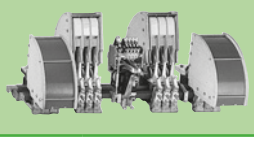	B10/43

Variable composition contactors: other solution

The use of a variable composition contactor becomes evident when the specification of the application can no longer be met with a standard contactor.

- High power load: > 400 kW.
- AC main supply from 1000 to 3000 V.
- Very inductive DC load: L/R > 15 ms.
- DC main supply with low current but voltage over 1000 V.
- High operating frequency: up to 1200 op./h.
- High durability: several millions of operations.

Some examples

The fact sheets are available at http://www.se.com/

Application form ref. EDCED110013EN

Application form ref. EDCED110014EN

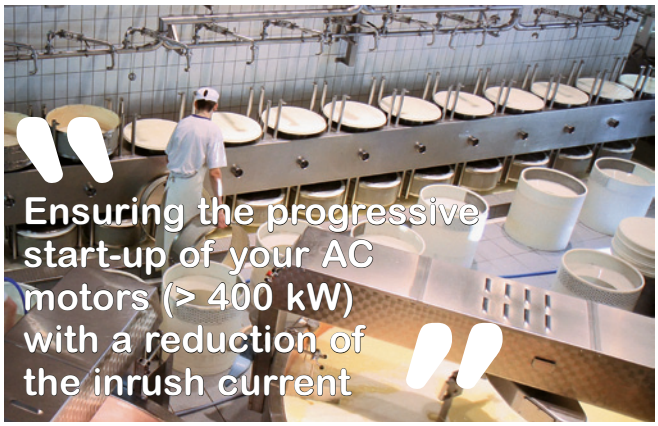

Application form ref. EDCED110017EN

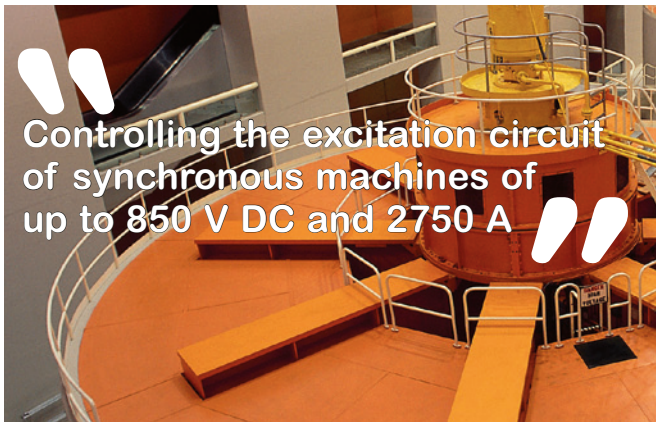

Application form ref. EDCED110018EN

Videos

Very high power contactors - **TeSys** B - 1 - Discovery

Discover Schneider Electric's TeSys B bar contactors that are designed to cut out considerable electric arcs. See how they are manufactured in the Schneider Electric factory and check out the presentation of the range.

Very high power contactors -**TeSys** B - 2 - Applications

Discover very high-power applications for which Schneider Electric's TeSys B bar contactors offer great advantages.

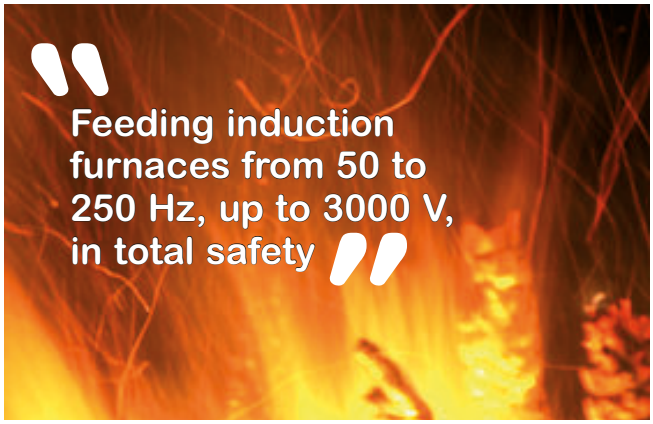

Application form ref. EDCED110015EN

Application form ref. EDCED110016EN

Application form ref. EDCED110019EN

Application form ref. EDCED110020EN

Very high power contactors -**TeSys** B - 3 - Technology

Discover how Schneider Electric's TeSys B bar contactors cut out electric arcs of up to several thousand Amps: 'magnetic blowing'.

Applications	■ Motor switching in categories AC-3. ■ Resistive load switching: heating, lighting. ■ Distribution circuit switching: line contactor. ■ Supply changeover switching: circuit coupling. ■ Transformer, capacitor.

PB110868.eps

PB110869.eps

Contactors	Type	**CV1B**						
	Size	**F**	**G** (1)	**H**	**J** (1)	**K** (with Type 1 pole)	**K** (with Type 3 poles)	**L** (1)
Rated operational current	AC-3	80 A		250 A		460 A	460 A	
	AC-4/DC-5	72 A/–		205 A/–		–/– A	380 / 630 A	
	AC-1	80 A		300 A		630 A	630 A	
Max. rated operational voltage		690 V ∿		690 V ∿		690 V ∿	1 000 V ∿	
Available with configuration type command		A - B - C - D						

Available control circuit configuration

Type A
a.c. supply ∿

501346_1.eps

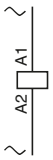

Type B
d.c. supply ⎓

501347_1.eps

(1) CV1B legacy size 'G', 'J', 'L' , CV3B legacy size 'G', 'J', 'K', please consult us.

Life Is On Schneider Electric

Offer panorama

- Motor switching in categories AC-4, DC-5.
- Inductive circuit switching: crane electromagnets.
- High voltage d.c. switching: railway locomotives.
- Load switching at high operating rates.

PB121215.eps

PB121216.eps

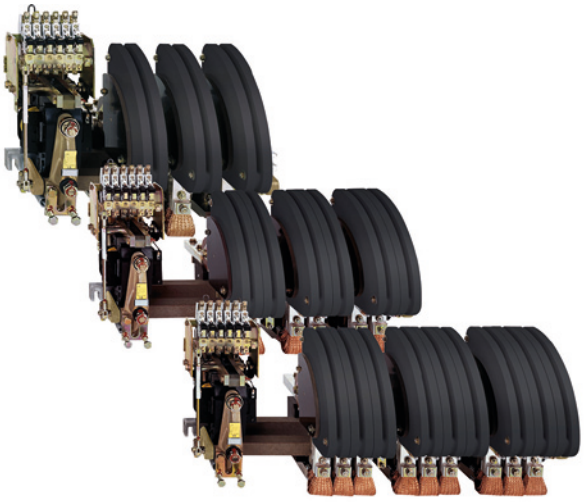

CV3B					CV3B and LC1B			
F	G (1)	H	J (1)	K (1)	L	M	P	R
80 A		250 A			800 A	1000 A	1500 A	1800 A
80/80 A		208/300 A			720/800 A	830/1000 A	1200/1800 A	1500/2500 A
80A		300 A			800 A	1250 A	2000 A	2750 A
1000 V ∼		1000 V ∼			1000 V ∼	1000 V ∼	1000 V ∼	1000 V ∼
A - B - C - D					C - D (B: special conditions - contact us)			

Type C
a.c. supply via economy resistor

501348_1R.eps

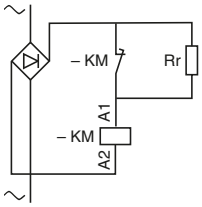

Type D
d.c. supply via economy resistor

501349_1R.eps

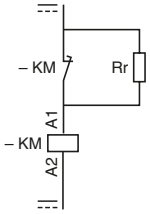

The variable composition contactor range is split into 3 groups:

■ **Low power switching contactors:**
□ type CV1B●, 80 to 630 A
□ type CV3B●, 80 to 300 A.
For motor control, the references of the CV1 and CV3 contactors are given on catalogue DIA2070702EN.
For other applications, the composition of the commercial references is described on Symbol combination table, see pages B10/29 to B10/31 or use the configuration software “bar contactor soft-customer.xls” to download on: www.se.com.

■ **Increased power switching contactors:**
□ type LC1B●, 800 to 2750 A. References shown on B10/32 and B10/33.

■ **Specific contactors** (large number of main poles, pole arrangement, customised fixing and dimensions, component referencing, etc.) :
□ type CV1●B, 80 to 630 A
□ type CV3●B, 80 to 2750 A.
To order these contactors, complete the Order form on catalogue DIA2070702EN.

10267-100-M.eps

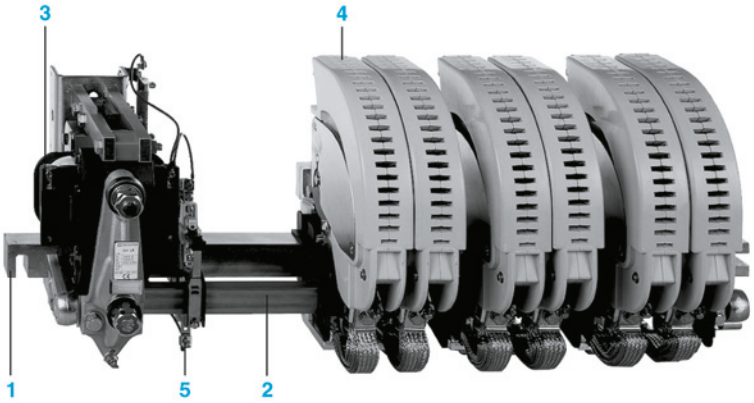

1 Mounting bar
2 Rotating armature shaft
3 Electromagnet
4 Main pole
5 Instantaneous auxiliary contacts

Variable composition contactors are particularly suited for switching a.c. or d.c. motors and other circuits and are capable of providing a high number of operating cycles.
Their variable composition design allows them to be built to customer specification.

Applications

These variable composition contactors are ideally suited for the most frequently encountered applications:

■ Switching a.c. squirrel cage and slip-ring motors in all utilisation categories (AC-2, AC-3, AC-4).
■ Switching d.c. motors in all utilisation categories (DC-2, DC-3, DC-4, DC-5).
■ Switching a.c. resistive loads (category AC-1) and d.c. resistive loads (category DC-1).
■ Switching distribution circuits (category AC-1).
■ Short-circuiting of rotor resistors.
■ Switching capacitors, power factor correction.
■ Switching transformer primaries.
■ Switching inductive circuits with high time constant (L/R > 15 ms)
Example: alternator excitation circuit.
■ Severe duty requirements and main pole arrangements comprising 1 to 6 N/O and/or N/C poles.

Life Is On Schneider Electric

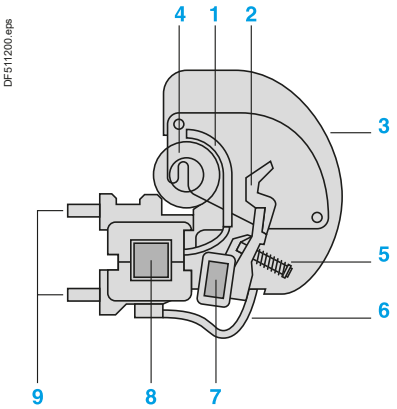

N/O pole 80…2750 A.

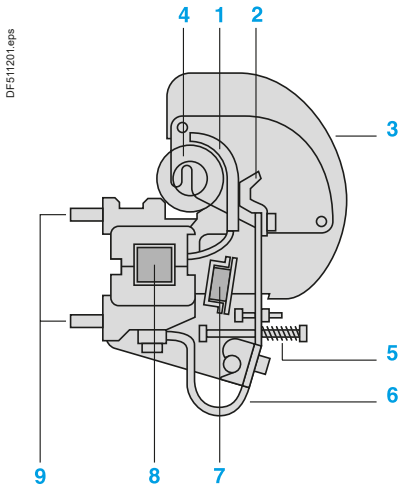

N/C pole 80…1000 A.

1 Fixed contact
2 Moving contact
3 Arc chamber
4 Blow-out coil
5 Pole pressure spring
6 Braided conductor
7 Rotating armature shaft (moving contact actuator)
8 Mounting bar
9 Terminal lugs

Power circuit

The principal function of a main pole is to make and break the supply current.
It is designed to continuously carry its nominal operational current.

Making the current

On energisation of the electromagnet coil, the armature shaft rotates and the moving contact makes with the fixed contact. The contact pressure, maintained by the pole pressure spring, is sufficient to overcome the electrodynamic forces of transient current peaks (e.g.: switching a transformer, starting a motor, etc.).

Breaking the current

On de-energisation of the electromagnet coil, the contacts separate and electrical arcing is dissipated by the blow-out coil and arc chamber. To optimise the performance of the magnetic blow-out, the blow-out coil can be selected to suit the operational current, which is particularly important when switching d.c.
The N/C pole operates in a reverse manner to the N/O pole, i.e. the contacts are closed whilst the electromagnet coil is de-energised and open during energisation.

CV1 contactors

■ **690 V ∿, 220 V ⎓ / pole**
□ N/O poles 80…1000 A (PN1)
□ N/C poles 80…1000 A (PR1).

■ **Variants:**
□ no-load breaking poles
- N/O poles 80…1000 A (PN5)
- N/C poles 80…1000 A (PR5).

□ arc chambers with splitters for dispersing the electric arc: 1000 V ∿ / 440 V ⎓ per pole
- N/O poles 630…1000 A (PN3)
- N/C poles 630…1000 A (PR3).

CV3 contactors

■ **1000 V ∿, 440 V ⎓ / pole**
□ N/O poles 0…300 A (PA3)
□ N/C poles 80…300 A (PR3)
□ N/O poles 750…2750 A (PA1).

■ **Variants:**
□ high making capacity poles 750…2750 A (PA2)
□ high breaking capacity poles and poles with reduced safety clearances (arc chambers with closed splitters) 750…2750 A (PA1PX8)
□ no-load breaking poles
- N/O poles 750…2750 A (PA5).

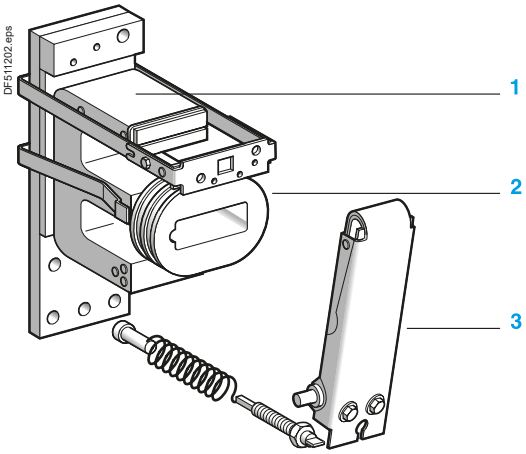

Electromagnet EB1
1 Electromagnet core
2 Coil
3 Electromagnet armature

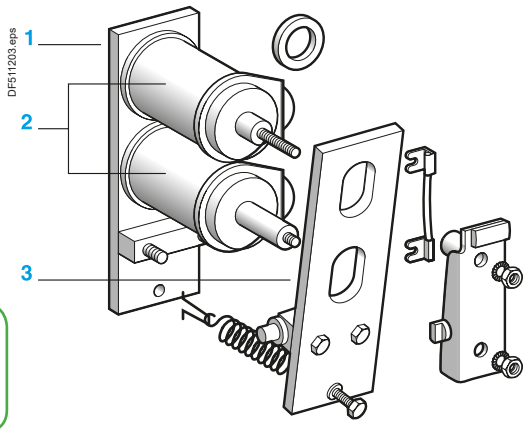

Electromagnet EK
1 Electromagnet core
2 Coil
3 Electromagnet armature

Control circuit

■ 2 types of electromagnet: E shaped core and U shaped core.
■ 2 types of coil: type WB1 and type WB2.

Electromagnet with E shaped core and coil type WB1

■ **Electromagnet with E shaped laminated iron core, type EB**
□ with central air gap machined in armature,
□ with single coil type **WB1** fitted on centre limb of core.
The upper limb incorporates a shading ring, the armature rotates.

■ **Coil - direct a.c. 50 or 60 Hz supply**
□ 20 to 600 V
□ 1200 operations/hour.

At the moment of inrush, with the armature open, the coil impedance is low and power consumption is high.
In the sealed state the armature is closed, the coil impedance increases and power consumption is low.
The inrush current is 6 to 10 times higher than the sealed current.

■ **Electromagnet** directly DC powered or via individual rectifier (50-400 Hz):
□ the electromagnet is mounted with the reduction in consumption
□ 12 to 500 V
□ 120 operations/hour.

■ **Electromagnet** powered via individual rectifier (50-400 Hz):
□ the electromagnet is mounted with the reduction in consumption
□ 12 to 500 V
□ 120 operations/hour.

At the moment of inrush, the full actuating voltage is applied to the coil and the inrush current is determined by the coil resistance.
In the sealed state an additional resistor is switched automatically in series with the coil, so as to reduce power consumption.
This economy resistor is switched by a N/C auxiliary contact which is adjusted to open only when the armature is fully closed.
The inrush current is 15 to 40 times higher than the sealed current.

Coils type WB1, used in conjunction with laminated iron cores, have a much higher inrush current than sealed current, whatever the nature of the supply current.

When establishing the current and selecting the supply voltage rating, it is important to take into account the line voltage drop due to the inrush current.

Electromagnet with U shaped core and coil type WB2 for d.c. supply

■ **Electromagnet** with U shaped solid iron core, type **EK:**
□ 2 similar coils type **WB2** connected in series, one coil being fitted to each limb of the core
□ the armature rotates.

■ **Electromagnet** for d.c. supply
□ 12 to 600 V
□ 1200 operations/hour.

The coils for this type of electromagnet have a considerable number of turns so as to obtain sufficient magnetic flux to attract the armature.

Due to its simplicity and relatively slow movements the assembly is very robust and, therefore, has increased mechanical durability.

Life Is On Schneider Electric

Instantaneous and time delay auxiliary contacts

Signalling, electrical interlocking and slave functions can be achieved by using auxiliary contacts.

Instantaneous auxiliary contacts suitable for use with all contactor types are available:
■ 1 block of 3 instantaneous N/O contacts and 2 N/C instantaneous contacts, reference LA1BN32A.

Delayed auxiliary contacts can be mounted onto contactors CV1 and CV3:
■ On the block LA1BN32A, 1 block of N/O ON-delayed contact + 1 N/C ON-delayed contact , references LADT0 (delay from 0.1 to 3 s), LADT2 (0.1 to 30 s), LADT4 (10 to 180 s)
■ On the block ref. LA1BN32A: 1 block of N/O OFF-delayed contact + 1 N/C OFF-delayed contact, references LADR0 (delay from 0.1 to 3 s), LADR4 (10 to 180 s).

The delayed contacts are established or separate some time after the closing or opening of the contactor which operates them. This time is adjustable.

On the block LA1BN32A all TeSys D contactors additives can be mounted, with the exception of LA6DK, LAD6K, LAD8N, LADN01, LADN10.

Assembling reversing/changeover contactor pairs

Mounting accessories

For applications involving the switching of reversing motors or changeover circuits, contactors of different ratings can easily be mounted vertically and interlocked. Mechanical interlock kits are available and auxiliary contacts can be used for electrical interlocking.

Selection criteria of the CV1B contactor size - utilisation category AC-3

Rated operational current in A at θ ≤ 55 °C						
CV1 contactors	Size					
	F	G (1)	H	J (1)	K	L (1)
Maximum operating rate in operating cycles/hour	**1200**		**1200**		**1200**	
≤ 440 V	80		250		460	
500 V	50		200		450	
690 V	35		150		400	

Nominal operational power at θ ≤ 55 °C						
CV1 contactors	Size					
	F	G (1)	H	J (1)	K	L (1)
Maximum operating rate in operating cycles/hour	**1200**		**1200**		**1200**	
220/230 V	22		75		140	
380/400 V	37		132		250	
415/440 V	37		140		260	
500 V	30		110		315	
660/690 V	22		110		315	

(1) CV1B legacy size 'G', 'J', 'L', please consult us.

Electrical durability (Ue ≤ 440 V)

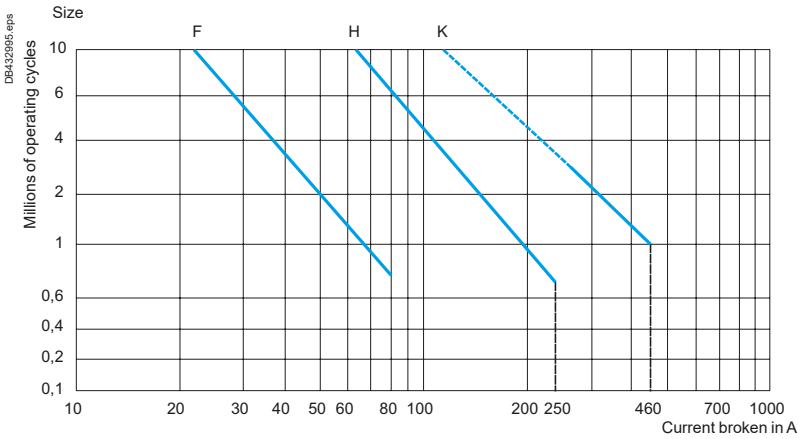

Life Is On Schneider Electric

PB110869.eps

CV1BF●A

Contactor reference tables, according standard motor power ratings in category AC-3

References

3-pole contactors for motor control

Standard power ratings of 3-phase motors 50-60 Hz in category AC-3						Maximum rated operational current, category AC-3	Instantaneous auxiliary contacts per contactor		Basic reference, to be completed by adding the voltage code (1) (2)	Frequently used voltage codes	Weight
220 V 230 V	380 V 400 V	415 V	440 V	500 V	660/ 690 V						
kW	kW	kW	kW	kW	kW	A					kg
22	37	37	37	30	22	**80**	3	2	**CV1BF3F0Z●●A**	**E5 F5 M5 Q5**	4.000
75	132	140	140	110	110	**250**	3	2	**CV1BH3H0Z●●A**	**E5 F5 M5 Q5**	11.000
140	250	260	260	315	315	**460**	1	1	**CV1BK3K0Z●●11**	**F5 M5 Q5**	40.000

(1) For other compositions, make up the contactor reference as explained on pages B10/29 to B10/31.
(2) Standard control circuit voltages (variable delivery, please contact us):

Volts	48	110	120	127	208	220	230	240	380	400	440
50 Hz	E5	F5	–	G5	–	M5	P5	U5	Q5	V5	R5
60 Hz	E6	–	K6	–	L6	M6	P6	U6	Q6	V6	R6
50/60 Hz	E7	F7	K7	G7	L7	M7	P7	U7	Q7	V7	R7
⎓	ED	FD	KD	GD	–	MD	PD	UD	QD	VD	–
⎓ + *Econ.R.* (3)	ER	FR	KR	GR	–	MR	PR	UR	QR	VR	–

For other voltages: please consult your Regional Sales Office.
(3) Econ.R.: Economy resistor.

Selection criteria of the CV1B contactor size - utilisation category AC-1

Maximum rated operational current (open-mounted device)

CV1 contactors				Size					
				F	G (1)	H	J (1)	K	L (1)
Maximum operating rate in operating cycles/hour				1200		1200		1200	
Connections									
	Cable	C.s.a.	mm²	25		185		–	
	Bars	Number		–		–		2	
		C.s.a.	mm	–		–		40 x 5	
≤ 40 °C			A	80		300		630	
≤ 55 °C			A	80		300		600	
≤ 70 °C			A	80		300		550	

(1) CV1B legacy size 'G', 'J', 'L', please consult us.

Increase in operational current by paralleling of poles

Apply the following multiplying factors to the current values given above. The factors take into account the often unbalanced current distribution between poles:

- 2 poles in parallel: K = 1.6
- 3 poles in parallel: K = 2.25
- 4 poles in parallel: K = 2.8.

Example: 2 poles in parallel.

Electrical durability (Ue ≤ 440 V)

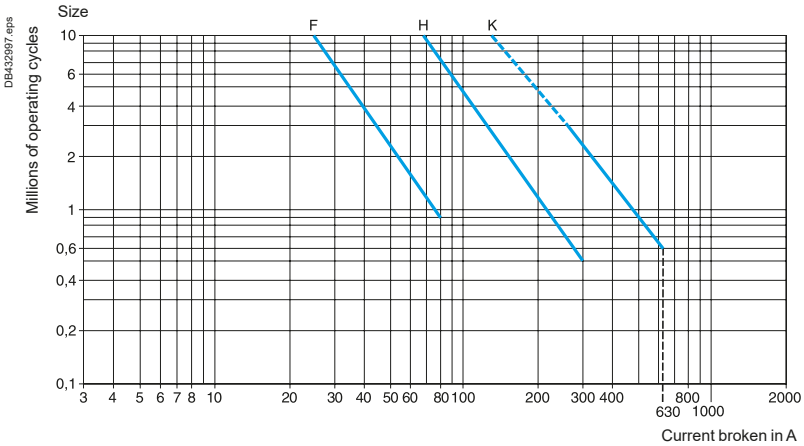

Life Is On Schneider Electric

PB112362.eps

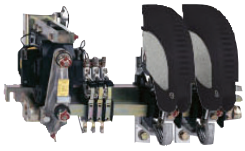

CV1BK

Selection criteria of the CV1B contactor size - utilisation category AC-1

Maximum possibilities of the contactor, new design (size F to H)

N/O poles	N/C poles
0	1
1	0
1	1
2	0
2	1
3	0
4	0

For another combination, please contact us.

Maximum possibilities of the standard contactor (size K)

N/O poles	N/C poles
0	1
1	0
1	1
0	2
2	0
2	1
3	0
4	0

Auxiliaries contacts

■ Size F-H, 5 instantaneous contacts (3N/C + 2N/O) + TeSys D contactor (except for LA6DK, LADN01, LADN10, LAD6K and LAD8N).

Electromagnet and coil(s)

■ For direct a.c. control
■ For direct d.c. control
■ For a.c. or d.c. control via economy resistor
(accessories: economy resistor + contact, rectifier).

DB403765.eps

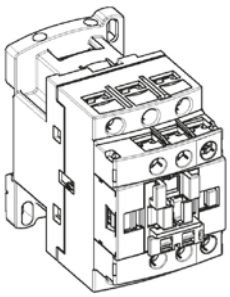

LA1BN32A

Auxiliary contact blocks per contactor

Contact type	Composition		Control circuit ∼ direct	Control circuit ⎓ direct	Control circuit ∼ or ⎓ with economy resistor	Reference	Weight kg
Contactor - Size F - H - K							
Instantaneous	3	2	1	1	1	**LA1BN32A**	0.060
Time delay							
On-delay	1	1	1	1	1	**LADT●** (1)	0.060
Off-delay	1	1	1	1	1	**LADR●** (1)	0.060

(1) Choose additives LADT● and LADR● from the TeSys D *range.*

Selection criteria of the CV1B contactor size - utilisation category AC-2 and AC-4

Maximum current broken in A

Related to maximum operating rate (operating cycles/hour) and on-load factor

CV1B contactors [1]		Size					
		F	G [2]	H	J [2]	K	L [2]
Operating cycles/hour [3] and on-load factor	Thermal limit zone [4]	Maximum current broken in A					
From 150 and 15 % to 300 and 10 %	A	165		520		1300	
From 150 and 20 % to 600 and 10 %	B	145		460		1150	
From 150 and 30 % to 1200 and 10 %	C	120		380		950	
From 150 and 55 % to 1200 and 20 %	D	90		280		700	
From 150 and 85 % to 1200 and 35 %	E	70		220		550	

Counter current braking (plugging)

The current varies from the maximum counter current braking value up to the nominal motor current. The current made must be compatible with the making and breaking capacities of the contactor. In most cases, breaking occurs at a current value close to the locked rotor current and contactor selection can therefore be made using the criteria for utilisation categories AC-2 and AC-4.

Electrical durability (Ue ≤ 440 V)

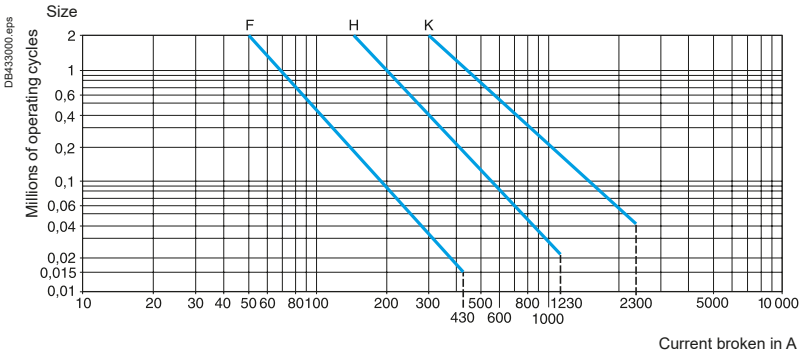

Example: contactor size selection

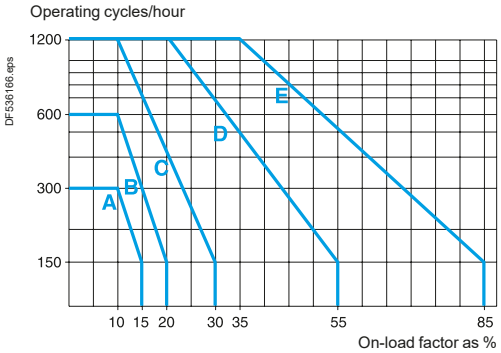

For an on-load factor of 17 % at 180 operating cycles per hour, the above curve indicates zone B. If the maximum current broken is 200 A, the table above will lead to the selection of a size H contactor. Referring to the electrical durability curves, it can be seen that the contactor will have a life of 1 million operating cycles. Where a higher value of electrical durability is required, 2 million operating cycles for example, size K would be recommended.

(1) To obtain the complete reference of the contactor see the Symbol combination table on pages B10/29 to B10/31. For customised compositions or dimensional specifications, please use the Order form on page B10/43 or consult your Regional Sales Office.
(2) CV1B legacy size 'G', 'J', 'L', please consult us.
(3) Do not exceed the maximum limit for the mechanical operating cycles.
(4) See curve at foot of page for thermal limit zone.

Selection criteria of the CV1B contactor size - utilization category DC-1

The selection of the contactor size and number of poles to be connected in series is made according to:
- the maximum operational voltage Ue
- the power broken
- the required electrical durability
- the nature of the load, in particular the time constant L/R
- the thermal operating conditions.

Maximum operational voltage Ue

This depends on the time constant of the circuit L/R ≤ 1 ms and the number of poles connected in series, on a single polarity or divided between both polarities (it is preferable to connect the negative polarity to the fixed contact side).

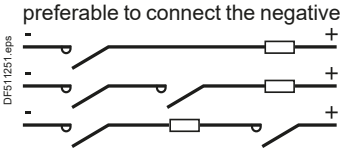

Number of poles to be connected in series according to the operational voltage (time constant of the circuit L/R ≤ 1 ms)				
CV1B contactors [1]		Size		
		F	H	K
1 pole PN1	V	220	220	220
2 poles PN1 in series	V	440	440	440
1 pole PN3	V	–	–	500
2 poles PN3 in series	V	–	–	1000

Normal operation: Ue ≥ U supply.

Rated operational current in A at θ ≤ 40 °C			
CV1B contactors	Size		
	F	H	K
	80	300	630

The use of a contactor selected according to the table above ensures current breaking up to 4 times the operational current.

Increase in rated operational current by connecting 2 poles in parallel

The equivalent operational current for 2 poles in parallel is equal to 2 x Ie x 0.8.

(1) To obtain the complete reference of the contactor refer to pages B10/29 to B10/31. For customised compositions or dimensional specifications, please use the Order form on page B10/43 or consult your Regional Sales Office.

Life Is On Schneider Electric

Selection guide for utilisation categorie DC-1 according to required electrical durability

Power broken			
Utilisation categories	**U broken**	**I broken**	**P broken**
DC-1: Non inductive or slightly inductive loads	Ue	Ie	Ue x Ie

Electrical durability (time constant L/R ≤ 1 ms)

The electrical durability can be read directly from the curves below, having previously calculated the power broken as follows:
P broken = U broken x I broken.
The table gives the values of Uc and Ic for the various utilisation categories.

Two-pole switching (time constant L/R ≤ 1 ms)
The required durability can be obtained, depending on the application, by increasing the number of poles in series or in parallel, or by increasing the contactor size.

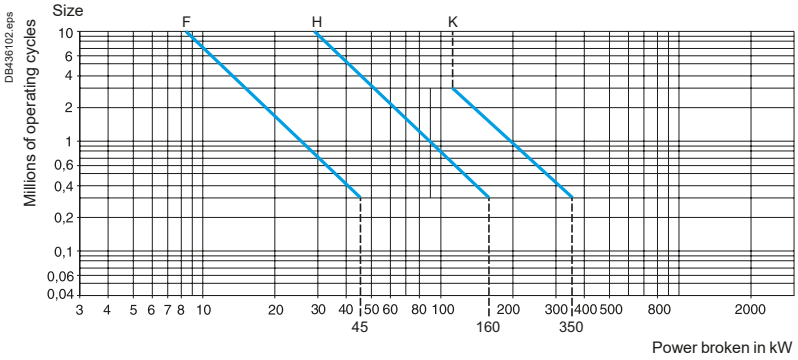

Number of main poles

The curve shows the number of operating cycles according to the power broken by two main poles connected in series. For a single pole, double the value of power broken before using the curves.

Thermal limit
The following limits must not be exceeded: 120 operating cycles/hour at 60 % or 300 operating cycles/hour at 30 % on-load factor, at the rated operational current Ie.

Selection criteria of the CV1B contactor size - utilisation category DC-3 and DC-5

The selection of the contactor size and number of poles to be connected in series is made according to:
- the maximum operational voltage Ue
- the power broken
- the required electrical durability
- the nature of the load, in particular the time constant L/R
- the thermal operating conditions.

Maximum operational voltage Ue

This depends on the time constant of the circuit L/R ≤ 15 ms and the number of poles connected in series, on a single polarity or divided between both polarities (it is preferable to connect the negative polarity to the fixed contact side).

DF511251.eps

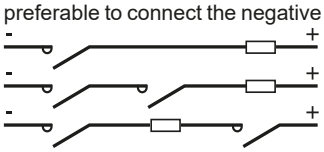

Number of poles to be connected in series according to the operational voltage (time constant of the circuit L/R ≤ 15 ms)				
CV1B contactors (1)		Size		
		F	H	K
1 pole PN1	V	220	220	220
2 poles PN1 in series	V	440	440	440
1 pole PN3	V	–	–	440
2 poles PN3 in series	V	–	–	850

Normal operation: Ue ≥ U supply.
With breaking during counter current braking (plugging): Ue ≥ 1.5 U supply.

Rated operational current in A at θ ≤ 40 °C			
CV1B contactors	Size		
	F	H	K
	80	300	630

The use of a contactor selected according to the table above ensures current breaking up to 4 times the operational current.

Increase in rated operational current by connecting 2 poles in parallel

The equivalent operational current for 2 poles in parallel is equal to 2 x Ie x 0.8.

DF511252.eps

(1) To obtain the complete reference of the contactor, refer to pages B10/29 to B10/31. For customised compositions or dimensional specifications, please use the Order form on page B10/43 or consult your Regional Sales Office.

Life Is On Schneider Electric

Selection criteria of the CV1B contactor size - utilisation category DC-3 and DC-5

Power broken			
Utilisation categories	**U broken**	**I broken**	**P broken**
DC-3: Shunt motors, reversing, inching	Ue	2.5 Ie	Ue x 2.5 Ie
DC-5: Shunt motors, reversing, inching	Ue	2.5 Ie	Ue x 2.5 Ie

Electrical durability (time constant L/R ≤ 15 ms)

The electrical durability can be read directly from the curves below, having previously calculated the power broken as follows:
P broken = U broken x I broken.
The table gives the values of Uc and Ic for the various utilisation categories.

Two-pole switching (time constant L/R ≤ 15 ms)
The required durability can be obtained, depending on the application, by increasing the number of poles in series or in parallel, or by increasing the contactor size.

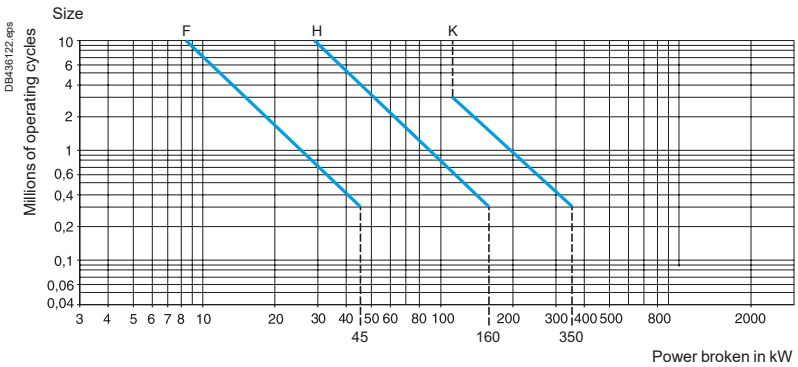

Number of main poles
The curve shows the number of operating cycles according to the power broken by two main poles connected in series. For a single pole, double the value of power broken before using the curves.

Thermal limit
The following limits must not be exceeded: 120 operating cycles/hour at 60 % or 300 operating cycles/hour at 30 % on-load factor, at the rated operational current Ie.

Selection criteria of the CV3B and LC1B contactor size - utilization category AC-3

Rated operational current in A at θ ≤ 55 °C

Contactors CV3 and LC1B	Size								
	F	G (1)	H	J (1)	K (1)	L	M	P	R
Maximum operating rate in operating cycles/hour	**1200**		**1200**			**120**	**120**	**120**	**120**
≤ 440 V	80		290			800	1000	1500	1800
500 V	80		250			800	1000	1500	1800
690 V	70		240			750	900	1000	1100
1000 V	70		220			500	500	600	700

Nominal operational power at θ ≤ 55 °C

Contactors CV3 and LC1B	Size								
	F	G (1)	H	J (1)	K (1)	L	M	P	R
Maximum operating rate in operating cycles/hour	**1200**		**1200**			**120**	**120**	**120**	**120**
220/230 V	22		75			220	280	425	500
380/400 V	37		132			400	500	750	900
415 V	37		132			425	530	800	900
440 V	45		132			450	560	800	900
500 V	45		160			500	600	750	900
660/690 V	55		200			560	670	750	900
1000 V	90		250			530	530	670	750

(1) CV3B legacy size 'G', 'J', 'K', please consult us.

Electrical durability (Ue ≤ 440 V)

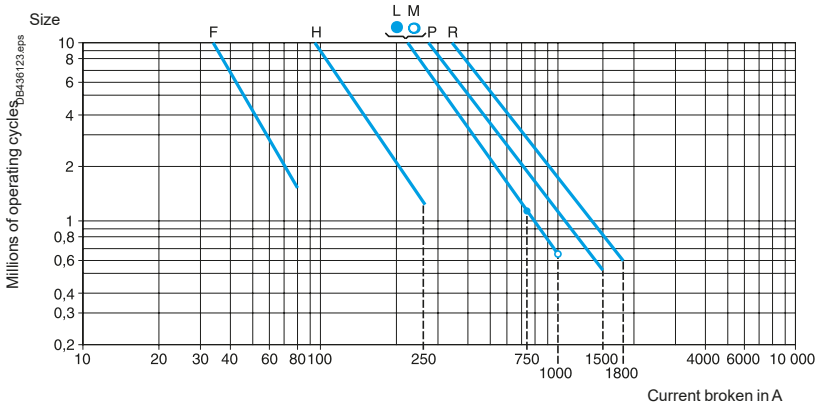

Electrical durability (Ue ≤ 690 V)

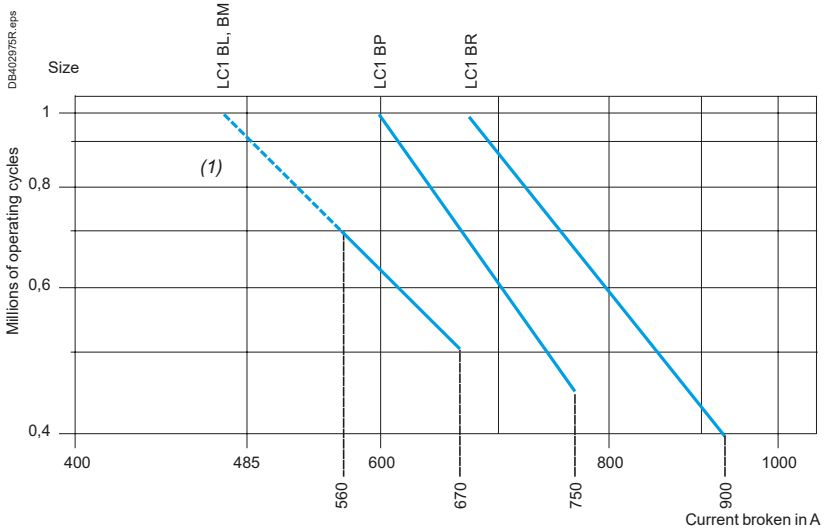

Life Is On Schneider Electric

PB112364.eps

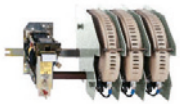

CV3BF

PB112365.eps

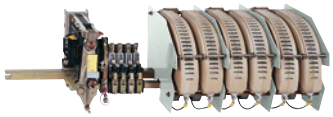

CV3BK

References

Contactors for motor control in category AC-3, from 80 to 460 A

Standard power ratings of 3-phase motors 50-60 Hz in category AC-3							Maximum rated operational current, category AC-3	Instantaneous auxiliary contacts per contactor		Basic reference, to be completed by adding the voltage code (1) (2)	Frequently used voltage codes	Weight
220 V 230 V	380 V 400 V	415 V	440 V	500 V	660/ 690 V	1000 V						
kW	kW	kW	kW	kW	kW	kW	A					kg
22	37	37	45	45	55	90	**80**	3	2	**CV3BF3F0Z●●A**	**E5 F5 M5 Q5**	10.600
75	132	132	132	160	200	250	**285**	3	2	**CV3BH3F0Z●●A**	**E5 F5 M5 Q5**	15.000

(1) For other compositions, make up the contactor reference as explained on pages B10/29 and B10/30.
(2) Standard control circuit voltages (variable delivery, please contact us):

Volts	48	110	120	127	208	220	230	240	380	400	440
50 Hz	E5	F5	–	G5	–	M5	P5	U5	Q5	V5	R5
60 Hz	E6	–	K6	–	L6	M6	P6	U6	Q6	V6	R6
50/60 Hz	E7	F7	K7	G7	L7	M7	P7	U7	Q7	V7	R7
⎓	ED	FD	KD	GD	–	MD	PD	UD	QD	VD	–
⎓ + *Econ.R.* (3)	ER	FR	KR	GR	–	MR	PR	UR	QR	VR	–

For other voltages: please consult your Regional Sales Office.
(3) Econ.R.: Economy resistor.

Contactors for motor control in category AC-3, from 750 to 1800 A (∼ or ⎓)

Standard power ratings of 3-phase motors 50-60 Hz in category AC-3							Maximum rated operational current in AC-3	Instantaneous auxiliary contacts per contactor		Basic reference, to be completed by adding the voltage code (4)	Frequently used voltage codes	Weight
220 V 230 V	380 V 400 V	415 V	440 V	500 V	660 V 690 V	1000 V						
kW	kW	kW	kW	kW	kW	kW	A					kg
220	400	425	450	500	560	530	**800**	2	2	**LC1BL33●22**	**G P V**	57.000
								3	1	**LC1BL33●31**	**G P V**	57.000
								1	3	**LC1BL33●13**	**G P V**	57.000
								4	–	**LC1BL33●40**	**G P V**	57.000
280	500	530	560	600	670	530	**1000**	2	2	**LC1BM33●22**	**G P V**	60.000
								3	1	**LC1BM33●31**	**G P V**	60.000
								1	3	**LC1BM33●13**	**G P V**	60.000
								4	–	**LC1BM33●40**	**G P V**	60.000
425	750	800	800	700	750	670	**1500**	2	2	**LC1BP33●22**	**G P V**	94.000
								3	1	**LC1BP33●31**	**G P V**	94.000
								1	3	**LC1BP33●13**	**G P V**	94.000
								4	–	**LC1BP33●40**	**G P V**	94.000
500	900	900	900	900	900	750	**1800**	2	2	**LC1BR33●22**	**G P V**	129.000
								3	1	**LC1BR33●31**	**G P V**	129.000
								1	3	**LC1BR33●13**	**G P V**	129.000
								4	–	**LC1BR33●40**	**G P V**	129.000

PB112359.eps

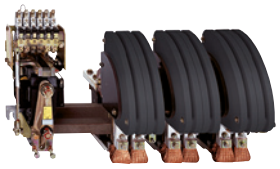

LC1BP

(4) Standard control circuit voltages (variable delivery, please contact us):

Volts	48	110	120	125	127	220	230	240	380	400	415	440	500
∼ 50…400 Hz	–	F	K	–	G	M	P	U	Q	V	N	R	S
⎓	ED	FD	–	GD	–	MD	–	UD	–	–	–	RD	SD

For voltages other than those listed above, please consult us.

Selection criteria of the CV3B and LC1B contactor size - utilization category AC-1

Maximum rated operational current (open-mounted device)

Contactors CV3 and LC1B			Size F	G (1)	H	J (1)	K (1)	L	M	P	R
Maximum operating rate in operating cycles/hour			1200		1200			120	120	120	120
Connections											
Cable	C.s.a.	mm²	25		120			–	–	–	–
Bars	Number		–		–			2	2	3	3
	C.s.a.	mm	–		–			50 x 5	80 x 5	100 x 5	100 x 10
≤ 40 °C		A	80		250			800	1250	2000	2750
≤ 55 °C		A	80		250			700	1100	1750	2400
≤ 70 °C		A	80		250			600	900	1500	2000

(1) CV3B legacy size 'G', 'J', 'K', please consult us.

Increase in operational current by paralleling of poles
Apply the following multiplying factors to the current values given above. The factors take into account the often unbalanced current distribution between poles:

- 2 poles in parallel: K = 1.6
- 3 poles in parallel: K = 2.25
- 4 poles in parallel: K = 2.8.

DF511252.eps

Example: 2 poles in parallel.

Electrical durability (Ue ≤ 440 V)

DB432999.eps

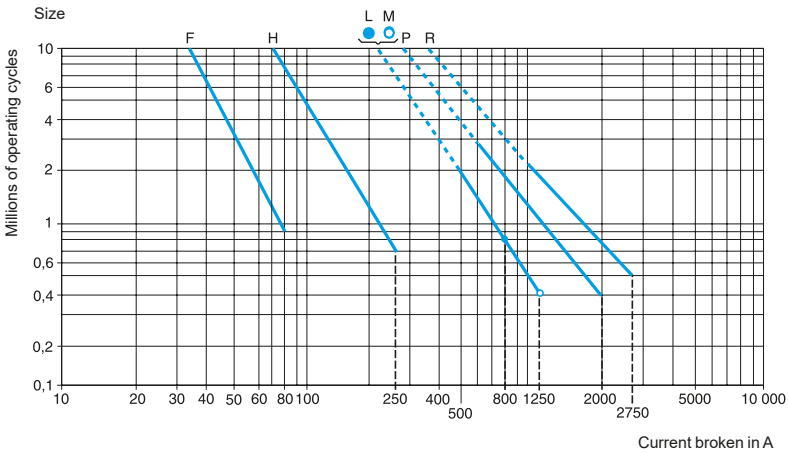

Life Is On Schneider Electric

PB112364.eps

CV3BF

Selection criteria of the CV3B and LC1B contactor size - utilization category AC-1

Maximum possibilities of the contactor

CV3B contactors are characterised by their extensive composition alternatives:
■ Poles [1]

Size F - H	
N/O poles	N/C poles
0	1
1	0
1	1
2	0
2	1
3	0
4	0

Size L - M - P - R	
N/O poles	N/C poles
1	0
2	0
3	0
4	0

Auxiliaries contacts
■ Size F-H, 5 instantaneous contacts (3N/C + 2N/O) + TeSys D contactor (except for LA6DK, LAD6K, LADN01, LADN10 and LAD8N).

Electromagnet and coil(s)
■ For direct a.c. control
■ For direct d.c. control
■ For a.c. or d.c. control via economy resistor
(accessories: economy resistor + contact, rectifier).

DB403765.eps

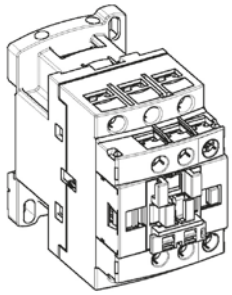

LA1BN32A

Auxiliary contact blocks contactor - Size F - H

Contact type	Composition		Control circuit			Reference	Weight
			∼ direct	⎓ direct	∼ or ⎓ with economy resistor		kg
Instantaneous	3	2	1	1	1	**LA1BN32A**	0.060
Time delay							
On-delay	1	1	1	1	1	**LADT●** [2]	0.060
Off-delay	1	1	1	1	1	**LADR●** [2]	0.060

(1) For possible compositions, see pages B10/29 to B10/31.
(2) Choose additives LADT● and LADR● from the TeSys D *range.*

Selection criteria of the CV3B and LC1B contactor size - utilization category AC-2 and AC-4

Thermal limits

Related to maximum operating rate (operating cycles/hour) and on-load factor

Contactors CV3 [1] and LC1B		Size								
		F	G [2]	H	J [2]	K [2]	L	M	P	R
Operating cycles/hour [3] and on-load factor	Thermal limit zone [4]	Maximum current broken depending on the duty Thermal limit at ambient temperature ≤ 55 °C								
From 150 and 15 % to 300 and 10 %	A	165		520			2250	3000	4500	5400
From 150 and 20 % to 600 and 10 %	B	145		460			2000	2400	3750	5000
From 150 and 30 % to 1200 and 10 %	C	120		380			1500	2000	3000	3600
From 150 and 55 % to 1200 and 20 %	D	90		280			1000	1500	2000	2500
From 150 and 85 % to 1200 and 35 %	E	70		220			750	1000	1500	1800

Counter current braking (plugging)

The current varies from the maximum counter current braking value up to the nominal motor current. The current made must be compatible with the making and breaking capacities of the contactor. In most cases, breaking occurs at a current value close to the locked rotor current and contactor selection can therefore be made using the criteria for utilisation categories AC-2 and AC-4.

Electrical durability (Ue ≤ 440 V)

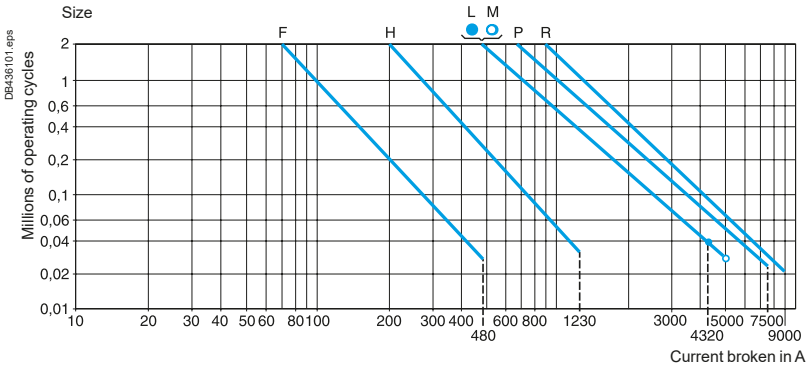

Example:

For an on-load factor of 17 % at 180 operating cycles per hour, the above curve indicates zone B. If the maximum current broken is 90 A, the table above will lead to the selection of a size F contactor. Referring to the electrical durability curves, it can be seen that the contactor will have a life of 1 100 000 operating cycles. Where a higher value of electrical durability is required, 2 million operating cycles for example, size H would be recommended.

Electrical durability (Ue ≤ 690 V)

Control of 3 phase asynchronous squirrel cage motors with “motor stalled” stop. The current Ic cut in AC-4 is 6 x Ie. (Ie = rated current drawn by the motor).

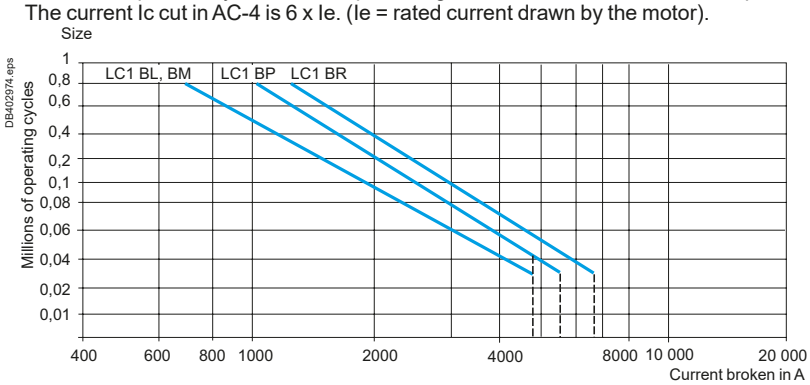

(1) To obtain the complete reference of the contactor see the Symbol combination table on pages B10/29 to B10/31. For customised compositions or dimensional specifications, please use the Order form on page B10/43 or consult your Regional Sales Office.
(2) CV3B legacy size 'G', 'J', 'K', please consult us.
(3) Do not exceed the maximum limit for the mechanical operating cycles.
(4) See curve at the previous page for thermal limit zone.

Life Is On Schneider Electric

Selection criteria of the CV3B and LC1B contactor size - utilization category DC-1

The selection of the contactor size and number of poles to be connected in series is made according to:
- the maximum operational voltage Ue
- the power broken
- the required electrical durability
- the nature of the load, in particular the time constant L/R
- the thermal operating conditions.

Maximum operational voltage Ue

This depends on the time constant L/R of the circuit and the number of poles connected in series, on a single polarity or divided between both polarities (it is preferable to connect the negative polarity to the fixed contact side).

DF511251.eps

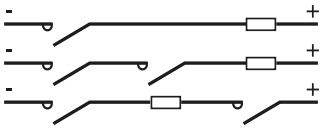

Number of poles to be connected in series according to the operational voltage		
Operational voltage	500 V	1
	1000 V	2
	1500 V	Please, consult us.

Normal operation: Ue ⩾ U supply.

Rated operational current in A at θ ⩽ 40 °C					
Contactor size CV3B [1]		**CV3B** and **LC1B**			
F	**H**	**L**	**M**	**P**	**R**
80	300	800	1000	1800	2500

The use of a contactor selected according to the table above ensures current breaking up to 4 times the operational current.

Increase in rated operational current by connecting 2 poles in parallel

The equivalent operational current for 2 poles in parallel is equal to 2 x Ie x 0.8.

DF511252.eps

(1) To obtain the complete reference of the contactor refer to pages B10/29 and B10/30. For customised compositions or dimensional specifications, please use the Order form on page B10/43 or consult your Regional Sales Office.

Selection criteria of the CV3B and LC1B contactor size - utilization category DC-1

Power broken			
Utilisation category	**U broken**	**I broken**	**P broken**
DC-1: Non inductive or slightly inductive loads	Ue	Ie	Ue x Ie

Electrical durability (time constant L/R ≤ 1 ms)
The electrical durability can be read directly from the curves below, having previously calculated the power broken as follows:
P broken = U broken x I broken.
The table gives the values of Uc and Ic for the various utilisation categories.

Power broken per pole (time constant L/R ≤ 1 ms)
The required durability can be obtained, depending on the application, by increasing the number of poles in series or in parallel, or by increasing the contactor size.

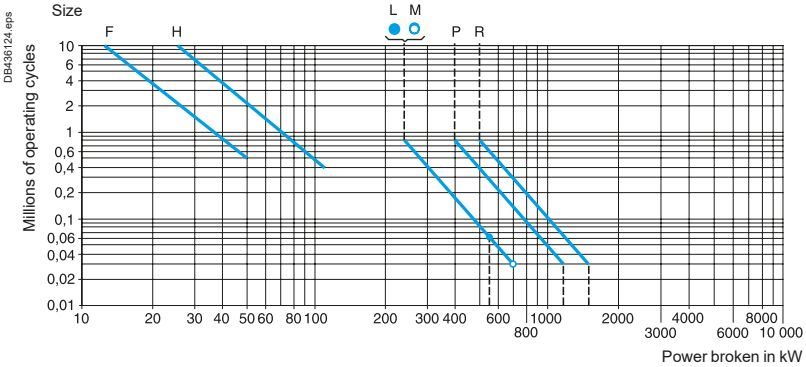

Number of main poles

The curve shows the number of operating cycles according to the power broken by two main poles connected in series. For a single pole, double the value of power broken before using the curves.

Thermal limit

The following limits must not be exceeded: 120 operating cycles/hour at 60 % or 300 operating cycles/hour at 30 % on-load factor, at the rated operational current Ie.

Life Is On Schneider Electric

Selection criteria of the CV3B and LC1B contactor size - utilization category DC-3 and DC-5

The selection of the contactor size and number of poles to be connected in series is made according to:
- the maximum operational voltage Ue
- the power broken
- the required electrical durability
- the nature of the load, in particular the time constant L/R
- the thermal operating conditions.

Maximum operational voltage Ue

This depends on the time constant L/R of the circuit and the number of poles connected in series, on a single polarity or divided between both polarities (it is preferable to connect the negative polarity to the fixed contact side).

DF511251.eps

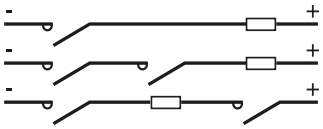

Number of poles to be connected in series according to the operational voltage and time constant L/R (in ms) of the circuit

Time constant in ms		15	30	60	90	120	150
Operational voltage	125 V	1	1	1	2	2	2
	225 V	1	1	2	3	3	4
	330 V	1	2	3	3	4	–
	440 V	1	2	3	4	–	–
	850 V	2	3	4	–	–	–
	1200 V (consult us)	3	4	–	–	–	–
	1500 V (consult us)	4	–	–	–	–	–

Normal operation: Ue ⩾ U supply.
With breaking during counter current braking (plugging): Ue ⩾ 1.5 U supply.

Rated operational current in A at θ ⩽ 40 °C

Contactor size CV3B [1]		CV3B and LC1B			
F	H	L	M	P	R
80	300	800	1000	1800	2500

The use of a contactor selected according to the table above ensures current breaking up to 4 times the operational current.

Increase in rated operational current by connecting 2 poles in parallel

The equivalent operational current for 2 poles in parallel is equal to 2 x Ie x 0.8.

DF511252.eps

(1) To obtain the complete reference of the contactor refer to pages B10/29 and B10/30. For customised compositions or dimensional specifications, please use the Order form on page B10/43 or consult your Regional Sales Office.

Selection criteria of the CV3B and LC1B contactor size - utilization category DC-3 and DC-5

Power broken			
Utilisation category	**U broken**	**I broken**	**P broken**
DC-3: Shunt motors, reversing, inching	Ue	2.5 Ie	Ue x 2.5 Ie
DC-5: Series motors, reversing, inching	Ue	2.5 Ie	Ue x 2.5 Ie

Electrical durability (time constant L/R ≤ 15 ms)
The electrical durability can be read directly from the curves below, having previously calculated the power broken as follows:
P broken = U broken x I broken.
The table gives the values of Uc and Ic for the various utilisation categories.

Power broken per pole (time constant L/R ≤ 15 ms)
The required durability can be obtained, depending on the application, by increasing the number of poles in series or in parallel, or by increasing the contactor size.

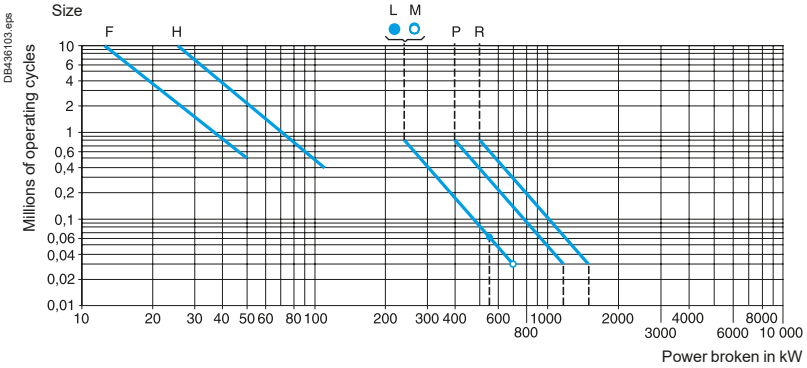

Example: 30 kW motor, 500 V-70 A in category DC-3: P broken = Ue x 2.5 Ie = 500 x 2.5 x 70 = 86 kW or 43 kW per pole.
*For a 2-pole size **F** contactor, the curve gives an electrical durability of 6 x 10^5 operating cycles.*

Electrical durability depending on the time constant

- According to the time constant L/R.
- L/R ≤ 15 ms, read the number of operating cycles directly from the curves.
- 15 < L/R ≤ 30 ms, the number of operating cycles is equal to the number read from the curves x $\frac{15}{L/R}$.
- L/R > 30 ms, please consult your Regional Sales Office.

Thermal limit

The following limits must not be exceeded: 120 operating cycles/hour at 60 % or 300 operating cycles/hour at 30 % on-load factor, at the rated operational current Ie.

Life Is On Schneider Electric

From assembly definition to contactor ordering

Contactor assembly definition
The criteria required to define the composition of a contactor are:
- the number of N/O and N/C power poles
- the current and power supply voltage

(note: on a d.c. supply, the time constant $\frac{L}{R}$ of the load must be known in order to define the number of poles to be wired in series to break the arc)
- the control circuit voltage
- the number of auxiliary contacts.

Contactor ordering - product reference composition
For all contactors:
- configuration software “bar contactor soft-customer.xls”

Link for download: https://www.se.com/ww/en/product-range-download/667-tesys-b/#/software-firmware-tab
- from order form in TeSys B catalogue ref. DIA2070702EN.

For contactors CV1BF/BH/BK, CV3BF/BH:
- software or selection tables below.

Checking of contactor possible assemblies
CV1B and CV3B have some restrictions:
- in rated operational current (Ie) per power pole
- in number of N/O - N/C power poles
- in number of auxiliary contacts.

Please refer to tables below.

Rated operational current per poles - codes per contactor type

Contactor type		CV1BF CV3BF	CV1BH CV3BH	CV1BK
Rated operational current (1)	11 A	E	–	–
	13 A	M	–	–
	20 A	N	–	–
	40 A	P	–	–
	50 A	Q	Q	–
	80 A	F	F	–
	125 A	–	R	I
	200 A	–	G	S
	250 A	–	–	H
	300 A	–	H	–
	320 A	–	–	–
	400 A	–	–	U
	470 A	–	–	–
	500 A	–	–	V
	630 A	–	–	K
	1000 A	–	–	–
	0 no magnetic blowing	Z	Z	Z

(1) Other rating: contact us.

CV1B contactors: maximum number of power poles

Contactor type	CV1BF		CV1BH		CV1BK	
Pole type	N/O	N/C	N/O	N/C	N/O	N/C
Number of poles	5	0	4	0	4	0
	0	2	0	2	0	2
	2	1	2	1	2	1

CV3B contactors: maximum number of power poles

Contactor type	CV3BF		CV3BH	
Pole type	N/O	N/C	N/O	N/C
Number of poles	5	0	4	0
	0	2	0	2
	1	2	–	–
	3	1	2	1

CV1B/CV3B contactors: maximum number of auxiliary contacts

Contactor type	CV1B		CV3B	
Pole type	N/O	N/C	N/O	N/C
	4 + 1 time delay if necessary			

Examples

- Switching of single-phase capacitor: 400 V - 80 A - 1 N/O main pole. 220 V / 50 Hz. control circuit voltage, 3 N/O and 2 N/C auxiliary contacts. Reference: **CV1BF1F0ZM5A**.
- Switching of d.c. heating circuits: 800 V - 250 A - 2 N/O main poles - 48 V ⎓. control circuit, instantaneous auxiliary contact 1 N/O + 1 on-delay. Reference: **CV3BH2H0ZEDA + LADT0, 2 or 4**.

Other versions

To obtain a composition with more main poles or with more than 4 auxiliary contacts, please use **order form CF 452, on** catalogue DIA2070702EN.

TeSys B Bar mounted contactors

Variable composition - CV1B and CV3B ordering process

Product reference coding table

		Serie	Size	Number of N/O poles	Op. current in N/O pole	Number of N/C poles	Op. current in N/C pole	Control voltage	Control frequency	Aux. contacts
Type of contactor related to application										
∼ 690 V, ⎓ 220 V/pole		CV1B								
∼ 1000 V, ⎓ 440 V/pole		CV3B								
Contactor size AC-1/AC-3										
CV1: 80/80 A	CV3: 80/80 A		F *							
CV1: 300/250 A	CV3: 300/285 A		H *							
Number of poles										
N/O poles	0 N/O			0						
	1 N/O			1						
	2 N/O			2						
	3 N/O			3						
	4 N/O			4						
N/C poles	0 N/C					0				
	1 N/C					1				
Operational current (determines the blow-out coil size)										
CV1BF/CV3BF	CV1BH/CV3BH									
AC / DC	AC / DC									
0 A breaking	0 A breaking				Z		Z			
0.9 A / 1 A	0.7 A / 1.05 A				A		A			
1.75 A / 1.9 A	1.25 A / 1.95 A				B		B			
3.6 A / 4 A	2.5 A / 3.85 A				C		C			
6.8 A / 7.6 A	4.7 A / 7.5 A				D		D			
11 A / 12 A	8 A / 12 A				E		E			
13 A / 14.5 A	10 A / 15 A				M		M			
20 A / 22 A	17 A / 24 A				N		N			
40 A / 45 A					P		P			
50 A / 55 A	60 A / 90 A				Q		Q			
80 A / 80 A	80 A / 120 A				F		F			
125 A	130 A / 190 A				R		R			
200 A	200 A / 200 A				G		G			
300 A	300 A / 300 A				H		H			
Control circuit voltage										
24 V								B		
48 V								E		
110 V								F		
120 V								K		
127 V								G		
208 V								L		
220 V								M		
230 V								P		
240 V								U		
380 V								Q		
400 V								V		
Operating frequency										
50 Hz									5	
60 Hz									6	
50/60 Hz (with rectifier + economy resistor)									7	
⎓									D	
⎓ with economy resistor									R	
Auxiliary contacts (LA1BN32 + additives (fitted as standard))										
Instantaneous	3 N/O + 2 N/C									A

To check whether the symbol combinations are possible, refer to the selection information and guide on page B10/29.
If in doubt, fill out order form CF 452, on page B10/43.

★ *Can use any additives in the range of contactors* TeSys D *except LA6DK, and LAD6K LAD8N.*

Important information for use by Schneider Electric
To place an order in SAP GRC switch-LOGOS
Example: Order the contactor CV1BH2HCZM5A
■ enter in the Reference product "CV1BH"
■ in the field "Technical text", specify "CV1BH2H02M5A".

Life Is On Schneider Electric

TeSys B Bar mounted contactors

Variable composition - CV1BK with PN1 or PN3 poles - ordering process

Product reference coding table

		Serie	Size	Number of N/O poles	Op. current in N/O pole	Number of N/C poles	Op. current in N/C pole	Pole type	Control voltage	Control frequency	Aux. contacts
Type of contactor related to application											
∼ 690 V, ⎓ 220 V/pole		CV1B									
∼ 1000 V, ⎓ 440 V/pole											
Contactor size AC-1/AC-3											
CV1: 630/460 A			K								
Number of poles											
N/O poles	0 N/O			0							
	1 N/O			1							
	2 N/O			2							
	3 N/O			3							
	4 N/O			4							
N/C poles	0 N/C					0					
	1 N/C					1					
	2 N/C					2					
Type of poles											
∼ 690 V, ⎓ 220 V/pole	Type 1 pole (PN1)							1			
∼ 1000 V, ⎓ 440 V/pole	Type 3 pole (PN3)							3			
Operational current (determines the blow-out coil size)											
0 A breaking					Z		Z				
150 A					I		I				
250 A					S		S				
300 A					H		H				
400 A					U		U				
500 A					V		V				
630 A					K		K				
Control circuit voltage											
24 V									B		
48 V									E		
110 V									F		
120 V									K		
127 V									G		
208 V									L		
220 V									M		
230 V									P		
240 V									U		
380 V									Q		
400 V									V		
415 V									N		
440 V									R		
480 V									T		
500 V									S		
600 V									X		
Operating frequency											
50 Hz										5	
60 Hz										6	
50/60 Hz (with rectifier + economy resistor)										7	
⎓										D	
⎓ with economy resistor										R	
Auxiliary contacts (LA1BN32 auxiliary contact block)											
3 N/O - instantaneous	1 aux. contact block										A
2 N/C - instantaneous	2 aux. contact blocks										B

To check whether the symbol combinations are possible, refer to the selection information and guide on page B10/29.
If in doubt, fill out order form CF 452, on page B10/43.

LC1BP33

Contactors for motor control in category AC-3, from 750 to 1800 A (∼ or ⎓)

3-pole contactors

Standard power ratings of 3-phase motors 50-60 Hz in category AC-3							Rated operational current in AC-3 440V up to	Instantaneous auxiliary contacts		Basic reference, to be completed by adding the voltage code (1)	Weight
220 V 230 V	380 V 400 V	415 V	440 V	500 V	660 V 690 V	1000 V					
kW	kW	kW	kW	kW	kW	kW	A				kg
220	400	425	450	500	560	530	750	2	2	**LC1BL33●22**	57.000
								3	1	**LC1BL33●31**	57.000
								1	3	**LC1BL33●13**	57.000
								4	–	**LC1BL33●40**	57.000
280	500	530	560	600	670	530	1000	2	2	**LC1BM33●22**	60.000
								3	1	**LC1BM33●31**	60.000
								1	3	**LC1BM33●13**	60.000
								4	–	**LC1BM33●40**	60.000
425	750	800	800	750	750	670	1500	2	2	**LC1BP33●22**	94.000
								3	1	**LC1BP33●31**	94.000
								1	3	**LC1BP33●13**	94.000
								4	–	**LC1BP33●40**	94.000
500	900	900	900	900	900	750	1800	2	2	**LC1BR33●22**	129.000
								3	1	**LC1BR33●31**	129.000
								1	3	**LC1BR33●13**	129.000
								4	–	**LC1BR33●40**	129.000

Contactors for control in category AC-1, from 800 to 2750 A (∼ or ⎓)

Single, 2, 3 or 4-pole contactors

Maximum operational current in AC-1 (θ ≤ 40 °C)	Number of poles	Instantaneous auxiliary contacts		Basic reference, to be completed by adding the voltage code (1)	Weight
A					kg
800	1	2	2	**LC1BL31●22**	31.000
		3	1	**LC1BL31●31**	31.000
		1	3	**LC1BL31●13**	31.000
		4	–	**LC1BL31●40**	31.000
	2	2	2	**LC1BL32●22**	44.000
		3	1	**LC1BL32●31**	44.000
		1	3	**LC1BL32●13**	44.000
		4	–	**LC1BL32●40**	44.000
	3	2	2	**LC1BL33●22**	57.000
		3	1	**LC1BL33●31**	57.000
		1	3	**LC1BL33●13**	57.000
		4	–	**LC1BL33●40**	57.000
	4	2	2	**LC1BL34●22**	71.000
		3	1	**LC1BL34●31**	71.000
		1	3	**LC1BL34●13**	71.000
		4	–	**LC1BL34●40**	71.000

(1) Standard control circuit voltages (for other voltages, please consult your Regional Sales Office):

Volts	48	110	120	125	127	220	230	240	380	400	415	440	500
∼ 50…400 Hz	–	F	K	–	G	M	P	U	Q	V	N	R	S
⎓	ED	FD	–	GD	–	MD	–	UD	–	–	–	RD	SD

*For voltages other than those indicated above, replace the p in the reference with the the operational voltage (3 figures) and the type of current (2 letters: **AC** for a.c. supply and **DC** for d.c. supply). Example: 82 V d.c., the reference becomes LC1BP33**082DC**22.*

Life Is On Schneider Electric

LC1BP33

Contactors for control in category AC-1, from 800 to 2750 A (∼ or ⎓)

Single, 2, 3 or 4-pole contactors

Maximum operational current in AC-1 (θ ≤ 40 °C)	Number of poles	Instantaneous auxiliary contacts		Basic reference, to be completed by adding the voltage code (1)	Weight
A					kg
1250	1	2	2	**LC1BM31●22**	34.000
		3	1	**LC1BM31●31**	34.000
		1	3	**LC1BM31●13**	34.000
		4	–	**LC1BM31●40**	34.000
	2	2	2	**LC1BM32●22**	47.000
		3	1	**LC1BM32●31**	47.000
		1	3	**LC1BM32●13**	47.000
		4	–	**LC1BM32●40**	47.000
	3	2	2	**LC1BM33●22**	60.000
		3	1	**LC1BM33●31**	60.000
		1	3	**LC1BM33●13**	60.000
		4	–	**LC1BM33●40**	60.000
	4	2	2	**LC1BM34●22**	74.000
		3	1	**LC1BM34●31**	74.000
		1	3	**LC1BM34●13**	74.000
		4	–	**LC1BM34●40**	74.000
2000	1	2	2	**LC1BP31●22**	41.000
		3	1	**LC1BP31●31**	41.000
		1	3	**LC1BP31●13**	41.000
		4	–	**LC1BP31●40**	41.000
	2	2	2	**LC1BP32●22**	65.000
		3	1	**LC1BP32●31**	65.000
		1	3	**LC1BP32●13**	65.000
		4	–	**LC1BP32●40**	65.000
	3	2	2	**LC1BP33●22**	94.000
		3	1	**LC1BP33●31**	94.000
		1	3	**LC1BP33●13**	94.000
		4	–	**LC1BP33●40**	94.000
	4	2	2	**LC1BP34●22**	120.000
		3	1	**LC1BP34●31**	120.000
		1	3	**LC1BP34●13**	120.000
		4	–	**LC1BP34●40**	120.000
2750	1	2	2	**LC1BR31●22**	52.000
		3	1	**LC1BR31●31**	52.000
		1	3	**LC1BR31●13**	52.000
		4	–	**LC1BR31●40**	52.000
	2	2	2	**LC1BR32●22**	85.000
		3	1	**LC1BR32●31**	85.000
		1	3	**LC1BR32●13**	85.000
		4	–	**LC1BR32●40**	85.000
	3	2	2	**LC1BR33●22**	129.000
		3	1	**LC1BR33●31**	129.000
		1	3	**LC1BR33●13**	129.000
		4	–	**LC1BR33●40**	129.000
	4	2	2	**LC1BR34●22**	160.000
		3	1	**LC1BR34●31**	160.000
		1	3	**LC1BR34●13**	160.000
		4	–	**LC1BR34●40**	160.000

(1) See previous page.

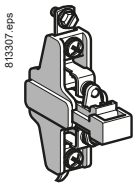

ZC4GM1

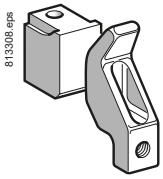

PA1LB80
(PA1LB76 + PA1LB75)

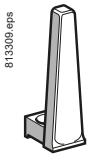

PA1LB89

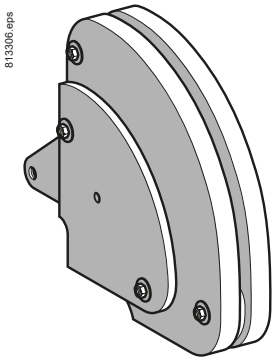

PA1LB50

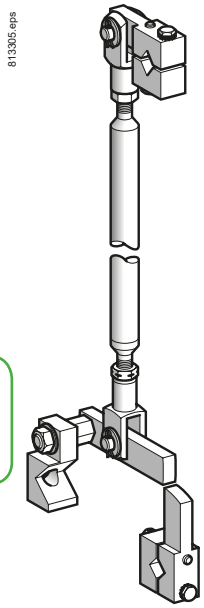

EZ2LB0601

Spare parts

Description	For contactor	Composition	Reference	Weight kg
Instantaneous auxiliary contact blocks	LC1B	1 N/O	**ZC4GM1**	0.030
		1 N/C	**ZC4GM2**	0.030

Description	For contactor	Number of sets required per contactor pole	Set reference	Weight kg
Set of contacts (1 moving contact, 1 fixed contact)	LC1BL	1	**PA1LB80**	0.420
	LC1BM	1	**PA1LB80**	0.420
	LC1BP	2	**PA1LB80**	0.420
	LC1BR	3	**PA1LB80**	0.420

Description	For contactor	Reference	Weight kg
Moving contact only (for 1 finger)	LC1B	**PA1LB75**	0.220
Fixed contact only (for 1 finger)	LC1B	**PA1LB76**	0.200
Blow-out horn only (for 1 finger)	LC1B	**PA1LB89**	0.120
Arc chamber (for 1 contactor pole)	LC1BL	**PA1LB50**	3.700
	LC1BM	**PA1LB50**	3.700
	LC1BP	**PA1PB50**	6.200
	LC1BR	**PA1RB50**	8.500

Mounting accessories

Description	For contactor	Sold in lots of	Unit reference	Weight kg
Bar support bracket for mounting on 120 or 150 mm centres	LC1BL to BR	2	**LA9B103**	1.620

Assembly of two vertically mounted contactors by the customer

Description	For contactor	Reference	Weight kg
Mechanical interlock and locking device components	LC1B	**EZ2LB0601**	1.280

Specifications

- Positive mechanical interlock between two vertically mounted contactors of the same or different ratings.
- Connecting rod with cranks mounted on the right-hand, pole side.
- Vertical fixing centres of the two contactors: 600 mm.

Description	Specification	Height mm	Sold in lots of	Unit reference	Weight kg
Notched mounting rails used as uprights and as equipment support	2 mm steel, with zinc chromate treatment	1650	4	**AM1EC165**	2.460
		1850	4	**AM1EC185**	2.760
		2000	4	**AM1EC200**	2.980
1/4 turn sliding clip nut and corresponding screw for assembly of rails AM1EC	M8	–	10	**NSYSNM8**	0.020
	M8 x 18	–	10	**AF1VC820**	0.024

Life Is On Schneider Electric

Introduction

Variable composition contactors CVE, CWE, CVX, CRX, CWXB are designed for switching the excitation circuits of synchronous machines, in particular electrical power station generators, for operational currents from 80 to 2750 A.
Example: Static excitation generator.

Basic scheme

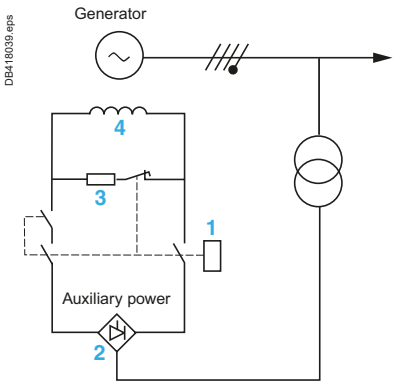

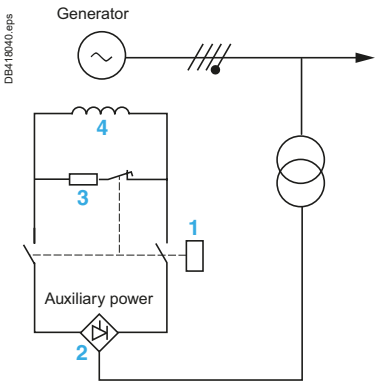

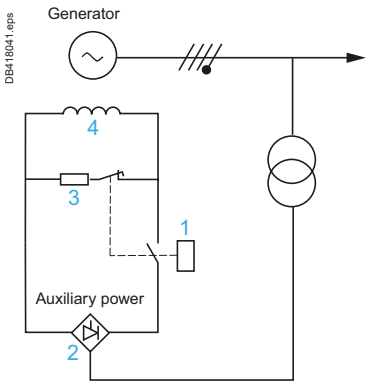

1 Excitation contactor
2 Thyristor bridge
3 Discharge resistor Rd
4 Excitation winding

Operating principle

The voltage delivered by the generator is related to the current flowing through the excitation winding 4.

Start-up phase

- The contactor 1 closes, off load.
- An adjustable auxiliary power supply generates current in the excitation winding 4 to allow power-up of the generator.
- When the voltage delivered by the generator is sufficient to supply the excitation winding 4 via a thyristor bridge 2, the auxiliary supply is switched off.

Stop phase

When a stop instruction is received, the thyristor bridge 2 operates for a few seconds as an inverter, then the excitation contactor 1 opens.
The function of the N/C pole is to discharge residual electromagnetic energy from the excitation winding 4 via the discharge resistor Rd 3.

Under normal operating conditions, breaking is therefore easy, especially as the N/O poles and the N/C pole are make before break.
However, in the event of a problem, the contactor must be able to break.

Contactor selection

Selection is done according to the nominal operating voltage of the machine and the necessity or not to fully isolate the thyristor bridge coil of the power supply (1, 2, or 3 N/O poles).

Note: *The N/C pole, which is used for machine de-excitation, has no arc chambers.*
Its breaking capacity is nil. Re-energisation of the contactor must therefore be avoided during the de-excitation phase.
If there is any risk of this happening, it is advisable to add an off-delay function that prevents pick-up of the contactor for the 10 seconds following drop-out.

CVEB and CWEB contactors composition:

■ 2 or N/O poles with magnetic blow-out (80…300 A)
■ 1 N/C pole without blow-out, overlapping contacts (possible mounting of a blow-out device)
■ 1 electromagnet with d.c. supply
□ either mechanical latching (CWEB)
□ or with economy resistor (CVEB).
■ 1 ZC4GM auxiliary contact or 1 or 2 instantaneous auxiliary contact heads (3 to 6 N/O contacts + 2 to 4 N/C contacts).
■ 1 mounting bar, 1 rotary drive shaft.

The following can be added:
■ 1 or 2 blocks of 4 instantaneous auxiliary contacts LADN●●, without increasing the overall size of the contactor
■ or 1 time delay block LADT● or LADR●.

***Note:** it is not possible to fit a mechanical latch block type LA6DK●● on these contactors.*

Characteristics

CVEB, CWEB contactor sizes			F		H	
N/O pole			**1 pole**	**2 poles**	**1 pole**	**2 poles**
Rated current	θ ≤ 40°C	**A**	80	80	300	300
Maximum operating voltage	d.c	**V**	220	440	220	440
Rated insulation voltage According to IEC 60664-1	d.c	**V**	690	690	690	690
Making capacity	d.c	**A**	1600	1600	4000	4000
Breaking capacity	d.c L/R = 15 ms	**A**	240	240	900	900
Overlap time with the N/C pole		**ms**	2	2	2	2
N/C pole						
Rated current	θ ≤ 40°C	**A**	80	80	300	300
Making capacity	d.c	**A**	1600	1600	4000	4000
Breaking capacity	d.c L/R = 15 ms	**A**	0	0	0	0
Permissible current	For 10 s	**A**	480	480	1400	1400

CVXB, CRXB and CWXB contactors composition:

■ 1 to 3 N/O poles with magnetic blow-out (80…2750 A)
■ 1 N/C pole without blow-out, overlapping contacts (possible mounting of a blow-out device)
■ 1 electromagnet with d.c supply
□ or with economy resistor (CVXB)
□ either with magnetic latching (CRXB)
□ either with mechanical latching (CWXB)
■ 1 ZC4GM auxiliary contact or 1 or 2 instantaneous auxiliary contacts (3 to 6 N/O contacts + 2 to 4 N/C contacts)
■ 1 mounting bar, 1 rotary drive shaft.

The following can be added:
■ 1 or 2 blocks of 4 instantaneous auxiliary contacts type LADN●●, without increasing the overall size of the contactor.
■ or 1 time delay block type LADT● or LADR●.

Note: *it is not possible to fit a mechanical latch block type LA6DK●● on these contactors.*

Characteristics

Size of contactors C●XB [1]			F			H		
N/O pole			**1 pole**	**2 poles**	**3 poles**	**1 pole**	**2 poles**	**3 poles**
Rated current	θ ≤ 40°C	A	80	80	80	300	300	300
Maximum operating voltage		V DC	440	850	1000	440	850	1000
Rated insulation voltage		V DC	1000	1000	1000	1000	1000	1000
Making capacity		A	1400	1400	1400	3500	3500	3500
Breaking capacity	For U max	A	500	500	500	1200	1200	1200
Overlap time with the N/C pole		ms	2	2	2	2	2	2
N/C pole								
Rated current	θ ≤ 40°C	A	80	80	80	300	300	300
Making capacity		A	1600	1600	1600	4000	4000	4000
Breaking capacity		A	0	0	0	0	0	0
Permissible current	For 10s	A	480	480	480	1400	1400	1400

Characteristics

Size of contactors C●XB			K			L		
N/O pole			**1 pole**	**2 pole**	**3 poles**	**1 pole**	**2 pole**	**3 poles**
Rated current	θ ≤ 40°C	A	630	630	630	800	800	800
Maximum operating voltage		V DC	440	850	1000	440	850	1200
Rated insulation voltage		V DC	1000	1000	1000	1500	1500	1500
Making capacity		A	6500	6500	6500	14000	14000	14000
Breaking capacity	For U max	A	2500	2500	2500	3200	3200	3200
Overlap time with the N/C pole		ms	2	2	2	2	2	2
N/C pole								
Rated current	θ ≤ 40°C	A	630	630	630	630	630	630
Making capacity		A	6500	6500	6500	6500	6500	6500
Breaking capacity		A	0	0	0	0	0	0
Permissible current	For 10s	A	3600	3600	3600	3600	3600	3600

Characteristics

Size of contactors C●XB			M			P			R		
N/O pole			**1 pole**	**2 poles**	**3 poles**	**1 pole**	**2 poles**	**3 poles**	**1 pole**	**2 poles**	**3 poles**
Rated current	θ ≤ 40°C	A	1250	1250	1250	2000	2000	2000	2750	2750	2750
Maximum operating voltage		V DC	440	850	1200	440	850	1200	440	850	1200
Rated insulation voltage		V DC	1500	1500	1500	1500	1500	1500	1500	1500	1500
Making capacity		A	14000	14000	14000	21000	21000	21000	25000	25000	25000
Breaking capacity	For U max	A	4400	4400	4400	7200	7200	7200	10000	10000	10000
Overlap time with the N/C pole		ms	2	2	2	2	2	2	2	2	2
N/C pole											
Rated current	θ ≤ 40°C	A	630	630	630	630	630	630	630	630	630
Making capacity		A	6500	6500	6500	6500	6500	6500	6500	6500	6500
Breaking capacity		A	0	0	0	0	0	0	0	0	0
Permissible current	For 10s	A	3600	3600	3600	3600	3600	3600	3600	3600	3600

(1) CRX, CVXB legacy size 'G', 'J'. Please consult us.

TeSys B Bar mounted contactors

Predefined composition - CVEB, CWEB, CVXB, CWXB contactors for synchronous motor excitation circuit

CVEB, CWEB contactors equipped with type 1 (PN1) N/O poles

Control circuit						With economy resistor	With mechanical latching	
Operational voltage	Number of poles N/O	Number of poles N/C	Instantaneous auxiliary contacts (2)		Rated operational current	Basic reference to be completed by adding the code of the blow-out coils (1), of the control voltage (2) and of the aux. contacts (3)	Basic reference to be completed by adding the code of the blow-out coils (1), of the control voltage (2) and of the aux. contacts (3)	Scheme
V					A			
220V DC	1	1	1, 3 or 6	1, 2 or 4	80	CVEBF1●1●●●●	CWEBF1●1●●●●	1
					200	CVEBG1●1●●●●	CWEBG1●1●●●●	1
					300	CVEBH1●1●●●●	CWEBH1●1●●●●	1
440V DC	2	1	1, 3 or 6	1, 2 or 4	80	CVEBF2●1●●●●	CWEBF2●1●●●●	2
					200	CVEBG2●1●●●●	CWEBG2●1●●●●	2
					300	CVEBH2●1●●●●	CWEBH2●1●●●●	2

CVX B, CWX B and CRX B contactors equipped with N/O poles type PA3 (F to H), PN3 (J and K) or PA1 (L to R)

Control circuit						Economy resistor	Mechanical latching	Magnetic latching	
Operational voltage	Number of poles N/O	Number of poles N/C	Instantaneous auxiliary contacts (2)		Rated operational current	Basic reference to be completed by adding the code of the blow-out coils (1), of the control voltage (2) and of the aux. contacts (3)	Basic reference to be completed by adding the code of the blow-out coils (1), of the control voltage (2) and of the aux. contacts (3)	Basic reference to be completed by adding the code of the blow-out coils (1), of the control voltage (2) and of the aux. contacts (3)	Scheme
V					A				
440V DC	1	1	1, 3 or 6	1, 2 or 4	80	CVXBF1●1●●●●	CWXBF1●1●●●●	CRXBF1●1●●●●	1
					300	CVXBH1●1●●●●	CWXBH1●1●●●●	CRXBH1●1●●●●	1
					630	CVXBK1●1●●●●	CWXBK1●1●●●●	CRXBK1●1●●●●	1
					800	CVXBL1●1●●●●	CWXBL1●1●●●●	CRXBL1●1●●●●	1
					1250	CVXBM1●1●●●●	CWXBM1●1●●●●	CRXBM1●1●●●●	1
					2000	CVXBP1●1●●●●	CWXBP1●1●●●●	CRXBP1●1●●●●	1
					2750	CVXBR1●1●●●●	CWXBR1●1●●●●	CRXBR1●1●●●●	1
850V DC	2	1	1, 3 or 6	1, 2 or 4	80	CVXBF2●1●●●●	CWXBF2●1●●●●	CRXBF2●1●●●●	2
					300	CVXBH2●1●●●●	CWXBH2●1●●●●	CRXBH2●1●●●●	2
					630	CVXBK2●1●●●●	CWXBK2●1●●●●	CRXBK2●1●●●●	2
					800	CVXBL2●1●●●●	CWXBL2●1●●●●	CRXBL2●1●●●●	2
					1250	CVXBM2●1●●●●	CWXBM2●1●●●●	CRXBM2●1●●●●	2
					2000	CVXBP2●1●●●●	CWXBP2●1●●●●	CRXBP2●1●●●●	2
					2750	CVXBR2●1●●●●	CWXBR2●1●●●●	CRXBR2●1●●●●	2
1000V DC	3	1	1, 3 or 6	1, 2 or 4	80	CVXBF3●1●●●●	CWXBF3●1●●●●	CRXBF3●1●●●●	3
					300	CVXBH3●1●●●●	CWXBH3●1●●●●	CRXBH3●1●●●●	3
					630	CVXBK3●1●●●●	CWXBK3●1●●●●	CRXBK3●1●●●●	3
1200V DC	3	1	1, 3 or 6	1, 2 or 4	800	CVXBL3●1●●●●	CWXBL3●1●●●●	CRXBL3●1●●●●	3
					1250	CVXBM3●1●●●●	CWXBM3●1●●●●	CRXBM3●1●●●●	3
					2000	CVXBP3●1●●●●	CWXBP3●1●●●●	CRXBP3●1●●●●	3
					2750	CVXBR3●1●●●●	CWXBR3●1●●●●	CRXBR3●1●●●●	3

(1) For the codes of the blow-out coils, please refer next page.
(2) Existing control voltages (other voltages, please consult us).

Volts	24	48	110	125	220	230	240	250
DC	BD *	ED *	FD	GD	MD	PD	-	UD
AC	B7 *	E7 *	F7	G7	M7	P7	U7	-

★ *K to R rating: please consult us.*

(3) 1 auxiliary contact type ZC4GM1 (code 1) or 1 auxiliary contact type ZC4GM2 (code 2) or 1 auxiliary contacts block type LA1BN32 (3 N/O contacts + 2 N/C contacts) (code A) or 2 auxiliary contacts blocks type LA1BN32 (6 N/O contacts + 4 N/C contacts) (code B).

Life Is On Schneider Electric

Ordering process

Coding principle of an excitation contactor product reference

C	V	E	B	G	2	G	1	Y	G	D	1
1	2	3	4	5	6	7	8	7(1)	9		10

(1) Standard construction without blow-out: code Y.

1 - Contactor

2 - Type of control circuit of the contactor
- V = Electromagnet with economy resistor
- R = Electromagnet with magnetic latching
- W = Electromagnet with mechanical latching

3 - Type of N/O poles
- E = PN1
- X= PA3 (FB to HB), PN3 (KB) and PA1 (LB to RB)

4 - Evolution

5 - Size of the contactor (in A)

F	H	K	L	M	P	R
80	300	630	800	1250	2000	2750

6 - Number of N/O poles
1, 2 or 3 according to the scheme used by the customer

7 - Operating current (Ie)

Code	Contactor					
	BF		BH		BK	
	Ie	Rep* blow-out	Ie	Rep* blow-out	Ie	Rep* blow-out
A	1	05				
B	1.9	07				
C	4	10				
D	7,6	14				
E	12	18				
M	12	20				
N	22	25				
P	45	9				
Q	55	7				
F	80	4				
R						
G			200	2		
H			300	1		
T						
U					400	53
J						
V					500	52
K					630	51
Y	Only for CV1 with pole type PN5 ou PR5 without blow-out					

8 - 1 N/C pole

9 - Control voltage

Code	BD	ED	FD	GD	MD		UD
Uc (V DC)	24	48	110	125	220		250
Code	**B7**	**E7**	**F7**	**G7**	**M7**	**P7**	**U7**
Uc (V AC)	24	48	110	127	220	230	240

10 - Block of auxiliary contacts
- 1 = 1 ZC4GM1
- A = 1 block type LA1BN32
- B = 2 blocks type LA1BN32 (standard configuration)

Performance label for the excitation contactors

	CVE, CRE, CWE				CVX, CRX, CWX					
	BF		BH		BF			BH		
	1P	2P	1P	2P	1P	2P	3P	1P	2P	3P
Ue (V DC)	200	440	200	440	440	850	1000	440	850	1000
In (A)	80		300		80			300		
Ie	See table 7									
Uc	See table 9									

	CVX, CRX, CWX														
	BK			BL			BM			BP			BR		
	1P	2P	3P	1P	2P	3P	1P	2P	3P	1P	2P	3P	1P	2P	3P
Ue (V DC)	440	850	1000	440	850	1000	440	850	1000	440	850	1000	440	850	1000
In (A)	630			800			1250			2000			2750		
Ie	See table 7														
Uc	See table 9														

CR1B Magnetic latching contactors introduction

The magnetic latching contactors are equipped with a specific electromagnet allowing them to maintain position “ON” although the coil is fed by any current.

Use

The specific properties of magnetic latching contactors make them suitable for many uses:

Properties	Use
Memory retention of the sequence in automatic equipment, in the event of loss of the control voltage.	Refineries, power plants, excitation circuits.
Energy saving, as no current is drained when the contactor is activated.	Contactor staying activated for long periods. Examples: refineries, alimentation energy, ST distribution.
Change of state “Work” / “Rest” by current pulse sent to the coil.	Selective opening control.
Insensitivity to main perturbations.	No unexpected opening or closing of power poles
Use of contactors beyond breaking capacity as they are activated off-load.	Passer diverter, for use with 1000 V
Silent contactor when locked in ON position	

Electro-magnet operation of the CR1B contactors

The CR1B magnetic latching contactors are equipped with a single coil, supplied with direct current or alternating current through a rectifier.
The latching is obtained by direct feeding of the coil with a current in a given direction.
The unlatching is produced by a current of opposite direction, adjusted by resistors.

Range

- The magnetic latching contactors are available from 80 to 630 A (Size F to K).
- The characteristics of N/O and N/C poles are identical to those of CV1 and CV3B (Size F to K).
- For other characteristics and mounting dimensions, please contact us.
- For ratings of 800 to 2750 A, see next page.

Life Is On Schneider Electric

Selection criteria of contactors for rotor starting motors

In simple starting systems the contactors which short-circuit the rotor current are subjected to a static voltage, the value of which, decreasing with time, is lower the further away the contactors are located from the rotor terminals. As a result, the operational rotor voltage is deducted from the maximum operational voltage. In this way, it is possible to use contactors with a rated insulation voltage lower than the rotor voltage.

In this application, making and breaking are easy. The selection table below takes into account a ratio of 2 between the maximum rotor operational voltage (Uer) and the stator operational voltage (Ues). This ratio is proposed in starter standard IEC 60947-4.

With counter current braking, the rotor operational voltage will be equal to the insulation voltage.

In a system with slowdown or braking, the selection of the contactors concerned should, in addition, take into account the breaking conditions.

The use of magnetic blow-out contactors is recommended in the event of control by a manually operated master controller.

Multiplying factor for rotor voltage and current, depending on type of contactor connection

As far as the current flowing through a rotor circuit contactor is concerned, the short time rating should be taken into account according to the starting time. Only the final rotor short-circuit contactor takes account of the continuous current.

Type of connection	Circuit diagram	I rotor / I operational	Maximum 3-phase rotor voltage Ue	3-phase rotor voltage UE with counter-current braking	Contactor type
			V	V	
Star	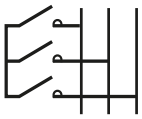	1	1320	660	**CV1B**
		1	2000	1000	**CV3B** **LC1B**
Delta	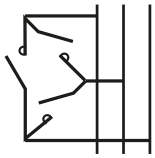	1,4	1100	550	**CV1B**
		1,4	1700	850	**CV3B** **LC1B**
V	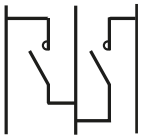	1	1100	550	**CV1B**
		1	1700	850	**CV3B** **LC1B**

Hoisting applications

For this type of application contactor selection is made according to the duty requirements, required durability, type of connection, etc.
Please consult your Regional Sales Office.

Other versions: For rotor voltage above 3000 V ∿, please consult your Regional Sales Office.

Contactors for furnaces and induction heating applications (CE1 - CS1, CE5 - CE6, CS5 - CS6)

Induction heating covers all applications where metals (or a metal part) are heated in crucible or “channel” furnaces, or in dies, by the induction of a.c. currents at various frequencies.
There are several frequency ranges which, for industrial purposes, can be grouped as follows:

- ■ 50 Hz to 400 Hz:
  - □ industrial mains power frequencies from 50 to 250 Hz
  - □ intermediate frequencies of 350 Hz and 400 Hz.
- ■ Maximum operating limits for contactors (single-pole and 6-pole):
  - □ frequency range up to 500 Hz
  - □ supply voltage up to 3000 V
  - □ currents up to 2750 A.

Please refer to our “Contactors for furnaces and induction heating applications” catalogue.

Contactor for the grounding of supply rail tram (CV1BKS)

Designed for networks up to 1000 V DC (high closing capacity up to 43 kA) to ensure the grounding of the rail when it loses power.
But also under fault condition in the event that the rail remains supplied after the passage of the tram.
View the application form CV1BKS on the site: www.se.com.

TeSys
TeSys B Bar mounted contactors
CF 452 - Customer requirements specification form

Download the configuration software "bar contactor soft-customer.xls" on:
https://www.se.com/ww/en/product-range-download/667-tesys-b/#/software-firmware-tab

Date of order | Editor | Geog. area | Order n° | Required delivery (1) | Job n°

Company: ..... Customer Order N°: .....

Activity sector: ..... Application: .....

Number of contactors: ..... Type - size or symbol combination: .....

For devices with symbol combination: Do not fill out the form below

Voltage: ..... V **AC** ☐ **..... Hz** **DC** ☐

Number of N/O main poles: Rated current: ..... Amp

Number of N/C main poles: Rated current: ..... Amp

Any special details: .....

.....

Voltage: ..... V **AC** ☐ **..... Hz** **DC** ☐

Economy resistor: ☐ Yes ☐ No

(unless specified, an economy resistor will only be included if necessary)

For alternative control, in direct latching contact: ☐ Yes ☐ No

Customer marking: .....

Instantaneous contacts: **Number of N/O** **Number of N/C**

If a specific type or block of contacts is required, please indicate below.

Number	GM1:	GM2:	GP4:	GP5:	GP6:	LA1:

Note : For mechanical interlocking, a N/C contact must be specified for the interlocking function.

Time delay contacts N/C + N/O : **On delay** ☐ **or** **Off delay** ☐

Note: If LA1 is used, a build specification is required.

Fixing centres L: Standard ☐ Specified ☐ With L = ...

Mechanical interlock "MI":

Yes ☐ No ☐

Vertically mounted reversers fixing centres "E" =..... mm

Upper position contactor: ..... Lower position contactor:

If mechanical interlock specified : Ref: .....

Supply linking components for the 2 contactors (Rod, clevis, cranks, lock, etc...) : Yes ☐ No ☐

Note : "MI" components that are part of the contactor such as the bearing, clevis or lock support are factory fitted.

Dimensions in catalogue

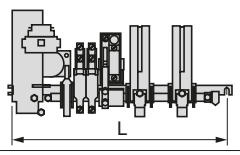

(Comments / Specific requirements / Special "MI" / Accessories / Etc...)

(1) Standard delivery time: 3 weeks, from receipt of order. For faster delivery, please consult your Regional Sales Office.

For use by Schneider Electric

Poles

Ref:

Ref:

Electromag:

Coil:

Coil maint. cont:

Rectifier:

Econ. resist. contact:

Econ. Resist.:

No. ZC4GM1 : **(N/O)**
No. ZC4GM2 : **(N/C)**
No. ZC1GP4 : **(N/C)**
No. ZC1GP5 : **(N/C+N/O)**
No. ZC1GP6 : **(N/O+N/O)**
No. ZC2GG1 : **(ON-Del)**
No. ZC2GG5 : **(OFF-Del)**

No. LA1BN●31 : ____
No. LA1DN●● : ____
No. LA●DT● : ____
If CV1, specif. n°:

Shaft: C or E =

Code.:

Bar: L = :

Code.:

Build see drwg.
N° :

"MI" bearing

W1

"MI" ref

Launch date

Delivery date

Contactor reference*

.....

* 3 possibilities

1) Device with symbol combination (see drwg 1492177)

2) Device n° defined on the basis of this form

Type/size/order n°/year. E.g.: CV1GB000599

3) Reference defined to "specification"

Bar mounted contactors