Product data sheet
Characteristics

XB4FK124B5
Harmony XB4, Illuminated selector switch flush mounted, metal, red, Ø30, 2 positions, stay put, 24 V AC/DC 1 NO + 1 NC

Main

Range of product	Harmony XB4
Product or Component Type	Illuminated selector switch
Device short name	XB4F
Bezel material	Chromium plated metal
Fixing collar material	Zamak
Head type	Built-in-flush
Mounting diameter	1.20 in (30.5 mm)
Sale per indivisible quantity	1
Shape of signaling unit head	Round
Type of operator	Stay put
Operator profile	Red standard handle
Operator position information	2 positions 90°
Contacts type and composition	1 NO + 1 NC
Contact operation	Slow-break
Connections - terminals	Screw clamp terminals, <= 2 x 1.5 mm² with cable end EN/IEC 60947-1 Screw clamp terminals, >= 1 x 0.22 mm² without cable end EN/IEC 60947-1
Light source	Protected LED
Bulb base	Integral LED
[Us] rated supply voltage	24 V AC/DC 50/60 Hz

Complementary

Height	2.09 in (53 mm)
Width	1.44 in (36.6 mm)
Depth	2.74 in (69.5 mm)
Terminals description ISO n°1	(13-14)NO (21-22)NC
Product Weight	0.33 lb(US) (0.151 kg)
Resistance to high pressure washer	1015.26 psi (7000000 Pa) 131 °F (55 °C) 0.1 m
Device mounting	Built-in 1.21 in (30.75 mm) +/- 0.25 mm
Fixing mode	By screws 7.08 lbf.in (0.8 N.m) 0.8...1.2 Nm)
Contacts usage	Standard contacts
Positive opening	With NC contact EN/IEC 60947-5-1 appendix K
Operating torque	1.24 lbf.in (0.14 N.m) NO changing electrical state
Mechanical durability	1000000 cycles
Tightening torque	7.08…10.62 lbf.in (0.8…1.2 N.m) EN 60947-1
Shape of screw head	Cross Philips no 1 Cross compatible with pozidriv No 1 screwdriver Slotted compatible with flat Ø 4 mm screwdriver Slotted compatible with flat Ø 5.5 mm screwdriver
Contacts material	Silver alloy (Ag/Ni)
Short-circuit protection	10 A cartridge fuse gG EN/IEC 60947-5-1

The information provided in this documentation contains general descriptions and/or technical characteristics of the performance of the products contained herein.
This documentation is not intended as a substitute for and is not to be used for determining suitability or reliability of these products for specific user applications.
It is the duty of any such user or integrator to perform the appropriate and complete risk analysis, evaluation and testing of the products with respect to the relevant specific application or use thereof.
Neither Schneider Electric Industries SAS nor any of its affiliates or subsidiaries shall be responsible or liable for misuse of the information contained herein.

[Ith] conventional free air thermal current	10 A EN/IEC 60947-5-1
[Ui] rated insulation voltage	600 V 3)EN 60947-1
[Uimp] rated impulse withstand voltage	6 kV EN 60947-1
[Ie] rated operational current	3 A 240 V, AC-15, A600 EN/IEC 60947-5-1 6 A 120 V, AC-15, A600 EN/IEC 60947-5-1 0.1 A 600 V, DC-13, Q600 EN/IEC 60947-5-1 0.27 A 250 V, DC-13, Q600 EN/IEC 60947-5-1 0.55 A 125 V, DC-13, Q600 EN/IEC 60947-5-1 1.2 A 600 V, AC-15, A600 EN/IEC 60947-5-1
Electrical durability	1000000 Cycles, AC-15, 2 A 230 V 3600 cyc/h 0.5 EN 60947-5-1 appendix C 1000000 Cycles, AC-15, 3 A 120 V 3600 cyc/h 0.5 EN 60947-5-1 appendix C 1000000 Cycles, AC-15, 4 A 24 V 3600 cyc/h 0.5 EN 60947-5-1 appendix C 1000000 Cycles, DC-13, 0.2 A 110 V 3600 cyc/h 0.5 EN 60947-5-1 appendix C 1000000 cycles, DC-13, 0.5 A 24 V 3600 cyc/h 0.5 EN 60947-5-1 appendix C
Electrical reliability	Λ < 10exp(-6) 5 V 1 mA in clean environment EN/IEC 60947-5-4 Λ < 10exp(-8) 17 V 5 mA in clean environment EN/IEC 60947-5-4
Signalling type	Steady
Supply voltage limits	19.2…30 V DC 21.6…26.4 V AC
Current Consumption	18 mA
Service life	100000 h at rated voltage and 25 °C
Surge withstand	1 kV IEC 61000-4-5
Device presentation	Complete product

Environment

Protective treatment	TH
Ambient Air Temperature for Storage	-40…158 °F (-40…70 °C)
Ambient Air Temperature for Operation	-40…158 °F (-40…70 °C)
Electrical shock protection class	Class I IEC 60536
IP degree of protection	IP66 IEC 60529 IP67 IEC 60529 IP69 IEC 60529 IP69K ISO 20653 Type 13 UL 50 E Type 12 UL 50 E Type 4 UL 50 E Type 4X UL 50 E
IK degree of protection	IK06 IEC 50102
Standards	CSA C22.2 No 14 EN/IEC 60947-5-1 EN/IEC 60947-5-4 UL 508 EN/IEC 60947-1 JIS C8201-5-1 CE JIS C8201-1
Product Certifications	UL Listed CSA CCC EAC
Vibration resistance	5 gn 10…500 Hz)IEC 60068-2-6 2 mm peak to peak 2…10 Hz)IEC 60068-2-6
Shock resistance	30 gn 18 ms) half sine wave acceleration IEC 60068-2-27 50 gn 11 ms) half sine wave acceleration IEC 60068-2-27 25 gn 6 ms) 1000 shocks on each axis IEC 60068-2-27
Resistance to fast transients	2 kV IEC 61000-4-4
Resistance to electromagnetic fields	9.14 V/m (10 V/m) IEC 61000-4-3
Resistance to electrostatic discharge	6 KV on contact (on metal parts) IEC 61000-4-2 8 kV in free air (in insulating parts) IEC 61000-4-2
Electromagnetic emission	Class B IEC 55011

Ordering and shipping details

Category	22468 - PUSHBUTTONS,22MM(METAL) NEW
Discount Schedule	CS2
GTIN	3606489580315
Nbr. of units in pkg.	1
Package weight(Lbs)	5.33 oz (151 g)
Returnability	No

Packing Units

Unit Type of Package 1	PCE
Package 1 Height	1.69 in (4.3 cm)
Package 1 width	2.05 in (5.2 cm)
Package 1 Length	3.39 in (8.6 cm)

Offer Sustainability

Sustainable offer status	Green Premium product
California proposition 65	WARNING: This product can expose you to chemicals including: Lead and lead compounds, which is known to the State of California to cause cancer and birth defects or other reproductive harm. For more information go to www.P65Warnings.ca.gov
REACh Regulation	REACh Declaration
REACh free of SVHC	Yes
EU RoHS Directive	Pro-active compliance (Product out of EU RoHS legal scope) EU RoHS Declaration
Mercury free	Yes
RoHS exemption information	Yes
China RoHS Regulation	China RoHS Declaration
Environmental Disclosure	Product Environmental Profile
Circularity Profile	End Of Life Information
WEEE	The product must be disposed on European Union markets following specific waste collection and never end up in rubbish bins.

Dimensions

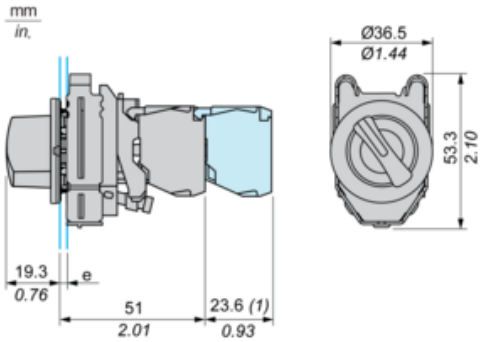

e : clamping thickness: 1 to 6 mm / 0.04 to 0.24 in.

(1) : Additional row of contacts

Panel Cut-out for Pushbuttons, Switches and Pilot Lights (Finished Holes, Ready for Installation)

Connection by Screw Clamp Terminals or Plug-in Connectors

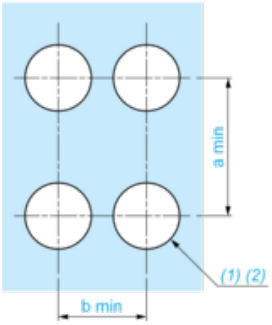

(1) : Diameter on finished panel or support

(2) : Ø30.75 mm recommended (Ø30.5 $_{0}^{+0.5}$) / Ø1.21 in. recommended (Ø1.20 in. $_{0}^{+0.0196}$)

Connections	a in mm	a in in.	b in mm	b in in.
By connectors	50	1.97	40	1.57
By connectors and with legend holder ZBZF32	50	1.97	40	1.57
By connectors and with legend holder ZBZF33	60	2.36	40	1.57