Altivar 312 to Altivar 32

Variable speed drives for synchronous and asynchronous motors

CANopen migration note

05/2013

EAV11212

www.schneider-electric.com

The information provided in this documentation contains general descriptions and/or technical characteristics of the performance of the products contained herein. This documentation is not intended as a substitute for and is not to be used for determining suitability or reliability of these products for specific user applications. It is the duty of any such user or integrator to perform the appropriate and complete risk analysis, evaluation and testing of the products with respect to the relevant specific application or use thereof. Neither Schneider Electric nor any of its affiliates or subsidiaries shall be responsible or liable for misuse of the information contained herein. If you have any suggestions for improvements or amendments or have found errors in this publication, please notify us.

No part of this document may be reproduced in any form or by any means, electronic or mechanical, including photocopying, without express written permission of Schneider Electric.

All pertinent state, regional, and local safety regulations must be observed when installing and using this product. For reasons of safety and to help ensure compliance with documented system data, only the manufacturer should perform repairs to components.

When devices are used for applications with technical safety requirements, the relevant instructions must be followed.

Failure to use Schneider Electric software or approved software with our hardware products may result in injury, harm, or improper operating results.

Failure to observe this information can result in injury or equipment damage.

© 2013 Schneider Electric. All rights reserved.

Table of content

- Safety information
- About the book
- Hardware presentation
- CANopen parameters
- Communication Channel
- Configuration of Control
- Communication profile
- CANopen Services / PDO
- CANopen Services / SDO
- CANopen Services / NMT
- CANopen Services / Node guarding
- CANopen Services / Heartbeat
- CANopen Services / EMCY
- CANopen object 1011
- Program example

Safety information

Important information

NOTICE

Read these instructions carefully, and look at the equipment to become familiar with the device before trying to install, operate, or maintain it. The following special messages may appear throughout this documentation or on the equipment to warn of potential hazards or to call attention to information that clarifies or simplifies a procedure.

The addition of this symbol to a Danger or Warning safety label indicates that an electrical hazard exists, which will result in personal injury if the instructions are not followed.

This is the safety alert symbol. It is used to alert you to potential personal injury hazards. Obey all safety message that follow this symbol to avoid possible injury or death.

Safety information

NOTICE

⚠ DANGER

DANGER indicates an imminently hazardous situation, which, if not avoided, will result in death or serious injury.

⚠ WARNING

WARNING indicates a potentially hazardous situation, which, if not avoided, can result in death, serious injury or equipment damage.

⚠ CAUTION

CAUTION indicates a potentially hazardous situation, which, if not avoided, can result in injury or equipment damage.

NOTICE

NOTICE, used without the safety alert symbol, indicates a potentially hazardous situation which, if not avoided, can result in equipment damage.

PLEASE NOTE

The word “drive” as used in this manual refers to the controller portion of the adjustable speed drive as defined by NEC. Electrical equipment should be installed, operated, serviced, and maintained only by qualified personnel. No responsibility is assumed by Schneider Electric for any consequences arising out of the use of this material.

About the Book

At a Glance

Document Scope

The purpose of this document is to describe the migration steps for CANopen fieldbus setup from ATV312 to ATV32.
For the complete explanation, need to refer to the related documents :

- ATV312 CANopen manual (BBV52819)
- ATV32 CANopen manual (S1A28699).

NOTE:

- **This migration manual is not intended to substitute to the ATV312 and ATV32 CANopen manuals.**
- **Read and understand this document and all related documents (next page) before installing,** operating, or maintaining your ATV32.

ATV312 (BBV52819)

ATV32 (S1A28699)

About the Book

Related Documents

Title of Document	Reference Number
ATV32 Quick Start guide	S1A41715
ATV32 Installation manual	S1A28686
ATV32 Programming manual	S1A28692
ATV32 Modbus manual	S1A28698
ATV32 CANopen manual	S1A28699
ATV32 Communication Parameters	S1A44568
ATV32 Atex manual	S1A45605
ATV32 Safety manual	S1A45606
ATV32 certificates and other option manuals: see www.schneider-electric.com	

You can download the latest versions of these technical publications and other technical information from our website at www.schneider-electric.com.

Product Related Information

⚠ DANGER

UNINTENDED EQUIPMENT OPERATION

• Altivar 32 drive must only be installed and serviced by qualified electrical personnel who have read and fully understood all pertinent documentation, listed in the related documents above.

• Any changes made to the parameter settings must be performed by qualified personnel.

Failure to follow these instructions will result in death or serious injury.

About the Book

Product Related Information

DANGER

HAZARD OF ELECTRIC SHOCK, EXPLOSION OR ARC FLASH

• Only appropriately trained persons who are familiar with and understand the contents of this manual and all other pertinent product documentation and who have received safety training to recognize and avoid hazards involved are authorized to work on and with this drive system. Installation, adjustment, repair and maintenance must be performed by qualified personnel.
• The system integrator is responsible for compliance with all local and national electrical code requirements as well as all other applicable regulations with respect to grounding of all equipment.
• Many components of the product, including the printed circuit boards, operate with mains voltage. Do not touch. Use only electrically insulated tools.
• Do not touch unshielded components or terminals with voltage present.
• Motors can generate voltage when the shaft is rotated. Prior to performing any type of work on the drive system, block the motor shaft to prevent rotation.
• AC voltage can couple voltage to unused conductors in the motor cable. Insulate both ends of unused conductors of the motor cable.
• Do not short across the DC bus terminals or the DC bus capacitors or the braking resistor terminals.
• Before performing work on the drive system:
- Disconnect all power, including external control power that may be present.
- Place a "Do Not Turn On" label on all power switches.
- Lock all power switches in the open position.
- Wait 15 minutes to allow the DC bus capacitors to discharge. The DC bus LED is not an indicator of the absence of DC bus voltage that can exceed 800 Vdc.
- Measure the voltage on the DC bus between the DC bus terminals using a properly rated voltmeter to verify that the voltage is < 42 Vdc.
- If the DC bus capacitors do not discharge properly, contact your local Schneider Electric representative.
• Install and close all covers before applying voltage.

Failure to follow these instructions will result in death or serious injury.

About the Book

Product Related Information

⚠ WARNING

LOSS OF CONTROL

• The designer of any control scheme must consider the potential failure modes of control paths and, for critical control functions, provide a means to achieve a safe state during and after a path failure. Examples of critical control functions are emergency stop, overtravel stop, power outage, and restart.

• Separate or redundant control paths must be provided for critical control functions.

• System control paths may include communication links. Consideration must be given to the implications of unanticipated transmission delays or failures of the link.

• Observe all accident prevention regulations and local safety guidelines .

• Each implementation of the product must be individually and thoroughly tested for proper operation before being placed into service.

Failure to follow these instructions will result in death or serious injury.

(a). For USA: Additional information, refer to NEMA ICS 1.1 (latest edition), Safety Guidelines for the Application, Installation, and Maintenance of Solid State Control and to NEMA ICS 7.1 (latest edition), Safety Standards for Construction and Guide for Selection, Installation and Operation of Adjustable Speed Drive Systems.

Hardware Presentation

ATV312

The ATV312 can be connected to a CANopen fieldbus by:

1) The communication base port in the front of the ATV312
2) The ATV312 CANopen daisychain option card (VW3A31208)

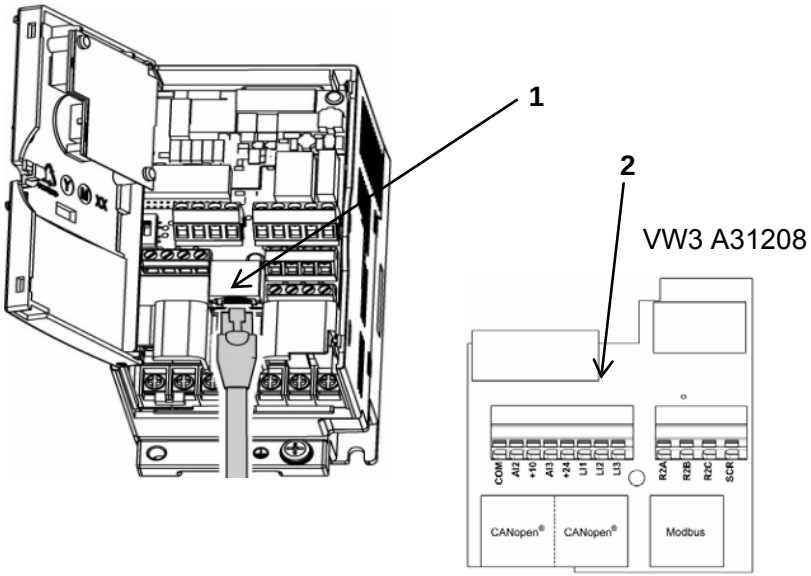

Note: The VW3A1208 is used in place of Standard Drive I/O card

ATV32

The ATV32 can be connected to a CANopen fieldbus by:

1) The communication base port in the front of the ATV32
2) The CANopen communication adapter (VW3A3608,VW3A3618, VW3A3628)

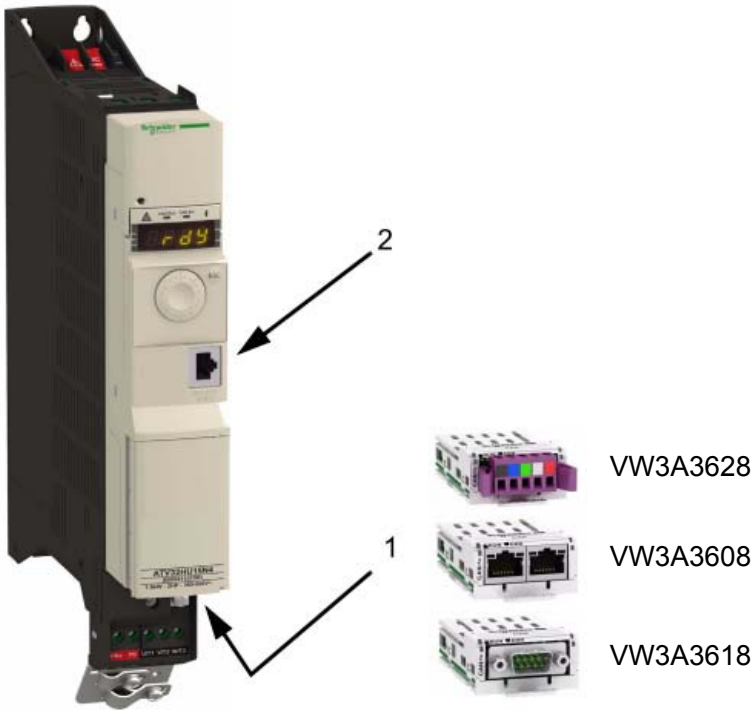

Note: The CANopen base port will become inactive when an option card is inserted.

CANopen parameters

ATV312

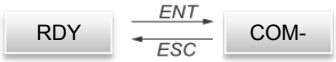

ATV32

	ATV312		ATV32	
[CANopen address]	ADCO	CANopen address for the drive Default value : 0 Range : 0 to 127	ADCO	CANopen address for the drive Default value : OFF Range : OFF to 127
[CANopen bit rate]	BDCO	Modbus transmission speed Default value : 125kbps - [10 kbps] : 10 kbps - [20 kbps] : 20 kbps - [50 kbps] : 50 kbps - [125 kbps] : 125 kbps - [250 kbps] : 250 kbps - [500 kbps] : 500 kbps - [1 Mbps] : 1000 kbps	BDCO	Modbus transmission speed Default value : 250kbps - [50 kbps] : 50,000 Bauds - [125 kbps] : 125,000 Bauds - [250 kbps] : 250,000 Bauds - [500 kbps] : 500,000 Bauds - [1 Mbps] : 1 Mbauds
[Error code]	ERCO	CANopen error code 0 : No error 1 : Bus off 2 : Life time 3 : CAN overrun 4 : Heartbeat	ERCO	CANopen error code 0 : No error 1 : Bus off 2 : Node guarding 3 : CAN overrun 4 : Heartbeat 5 : NMT state chart fault

Communication Channel

ATV312

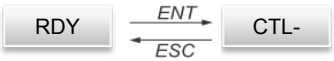

The [ACCESS LEVEL] (LAC) parameter in the [COMMAND] (CtL-) menu, can be used to select priority modes for the control and reference channels. It has 3 function levels:

→ [ACCESS LEVEL] (LAC) = [Level 1] (L1):
Basic functions. The channels are managed in order of priority.

→ [ACCESS LEVEL] (LAC) = [Level 2] (L2):
Provides the option of additional functions compared with [Level 1] (L1):

- +/- speed (motorized jog dial)
- Brake control
- 2nd current limit switching
- Motor switching
- Management of limit switches

→ [ACCESS LEVEL] (LAC) = [Level 3] (L3):
Same functions as with [Level 2] (L2). Management of the control and reference channels is configurable.

These channels can be combined in order of priority if [ACCESS LEVEL] (LAC) = [Level 1] (L1) or [Level 2] (L2).
Highest priority to lowest priority: Forced local mode, Network, Modbus, Remote display terminal, Terminals/Keypad (from right to left in the diagram below)

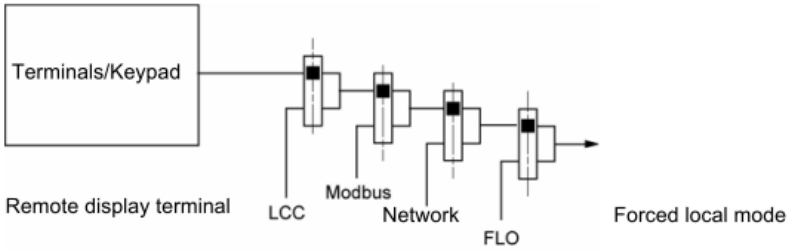

Communication Channel

ATV32

No channel management by priority. The command and reference channel have to be configured in the drive configuration
Reference channel for [Not separ.] (SIM), [Separate] (SEP) and [I/O profile] (IO) configurations

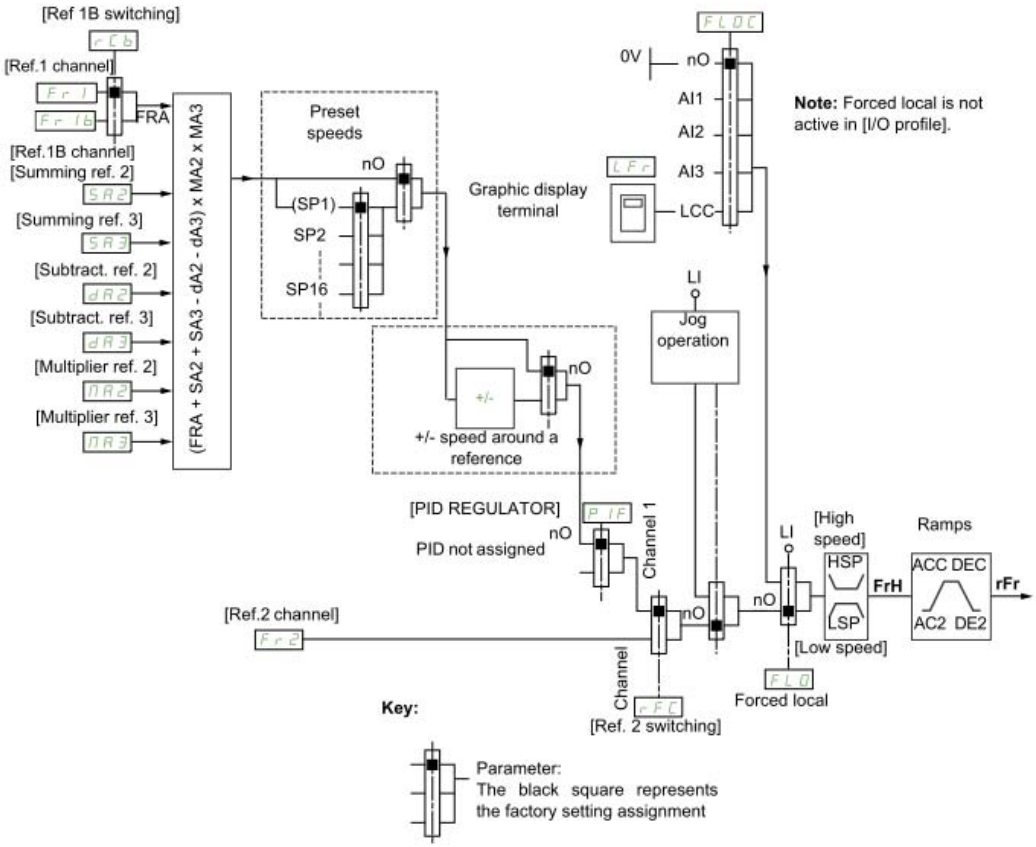

Fr1
- Terminals, graphic display terminal, integrated Modbus, integrated CANopen®, communication card

Fr1b, for SEP and IO
- Terminals, graphic display terminal, integrated Modbus, integrated CANopen®, communication card

Fr1b, for SIM
- Terminals, only accessible if Fr1 = terminals

SA2, SA3, dA2, dA3
- Terminals only

Fr2
- Terminals, graphic display terminal, integrated Modbus, integrated CANopen®, communication card, and +/- speed

Note: [Ref.1B channel] (Fr1b) and [Ref 1B switching] (rCb) must be configured in the [APPLICATION FUNCT.] (Fun-) menu.

Configuration of Control

ATV312

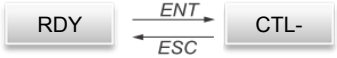

Command and reference are managed by priority if LAC = L1 or L2.
No special configuration is needed in LAC = L1 or L2 to be able to use command and reference coming from CANopen.

ATV32

No management of priority.
With ATV32 it's always necessary to configure the command and reference channel in the drive to be able to use command from CANopen.
Configuration is made with parameters describe d below.

Blue configuration corresponds to the parameter setting allowed to command the drive via CANopen
Note that for ATV32, even if CANopen option card is inserted (VW3 A3 608,VW3 A3 618, VW3 A3 628), FR1 or CD1 have to be set to CANopen and not communication card.

	ATV312		ATV32	
[Profile]	CHCF	Parameter can be accessed if [ACCESS LEVEL] (LAC) = [Level 3] - **[Not separ.]** (SIM) : Combined - **[Separate]** (SEP): Separate	CHCF	**[Not separ.]** (SIM): Reference and command, not separate **[Separate]** (SEP): Separate reference and command. This assignment cannot be accessed in [I/O profile] (IO). **[I/O profile]** : I/O profile
[Ref.1 channel]	FR1	Default value : AI1 Range : [AI1] - Analog input AI1 [AI2] - Analog input AI2 [AI3] - Analog input AI3 [AI Virtual 1] – Jog dial [HMI] : Reference via Modbus **[Com. card] (nEt):** Reference via network communication protocol	FR1	Default value : AI1 Range : [AI1] : Analog input A1 [AI2] : Analog input A2 [AI3] : Analog input A3 [HMI] : Graphic display terminal or remote display terminal source [Modbus] : Integrated Modbus **[CANopen] (CAn):** CANopen® [Com. card] (nEt): Communication card (if inserted) [RP] (PI): Pulse input [AI virtual 1] (AIU1): Jog dial [OA01] to [OA10]: Function blocks: Analog Output xx
[Cmd channel 1]	CD1	- [Terminal] (tEr): Control via terminals - [Local] (LOC): Control via keypad - [Remot. HMI] (LCC): Control via remote display terminal - [Modbus] (Mdb): Control via Modbus - **[Com. card] (nEt):** Control via the network	CD1	[Terminals] : Terminals [HMI] : Graphic display terminal or remote display terminal [Modbus] : Integrated Modbus **[CANopen]** : Integrated CANopen® [Com. Card]: Communication card (if inserted)

Communication Profile

ATV312

IEC 61800-7 status chart

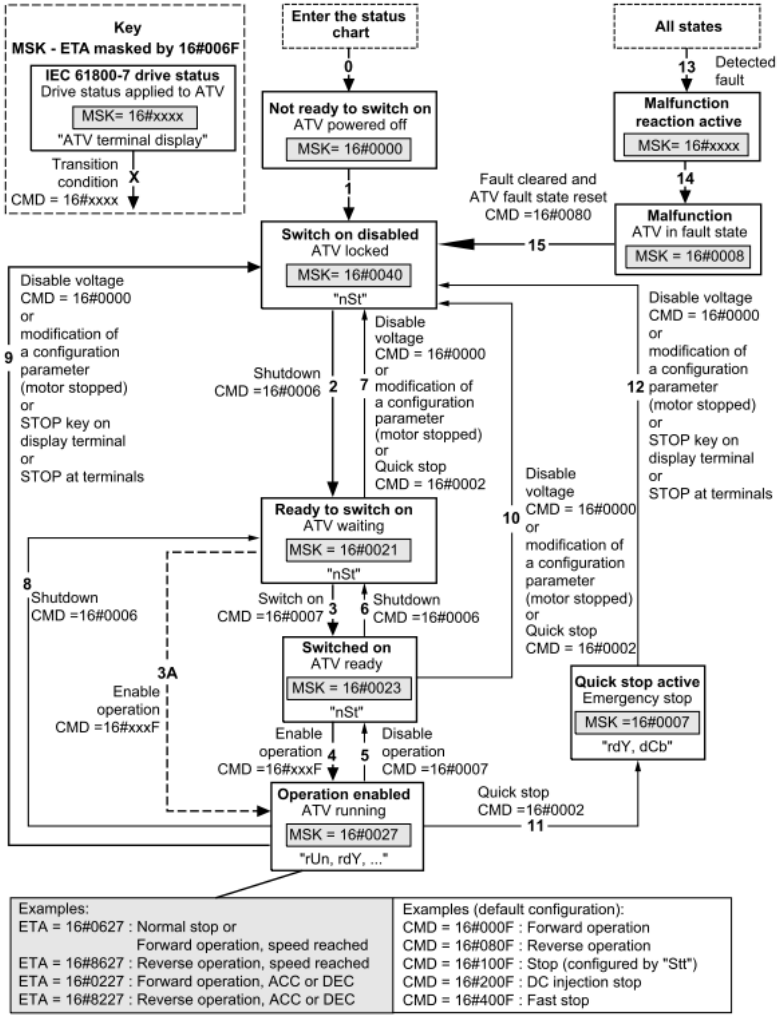

Examples:	Examples (default configuration):
ETA = 16#0627 : Normal stop or Forward operation, speed reached	CMD = 16#000F : Forward operation
ETA = 16#8627 : Reverse operation, speed reached	CMD = 16#080F : Reverse operation
ETA = 16#0227 : Forward operation, ACC or DEC	CMD = 16#100F : Stop (configured by "Stt")
ETA = 16#8227 : Reverse operation, ACC or DEC	CMD = 16#200F : DC injection stop
	CMD = 16#400F : Fast stop

Exiting the "Operation enabled" status via a "Disable voltage" (9) or "Shutdown" (8) command causes a freewheel stop.

ATV32

CiA®402 - IEC61800-7 Functional Profile

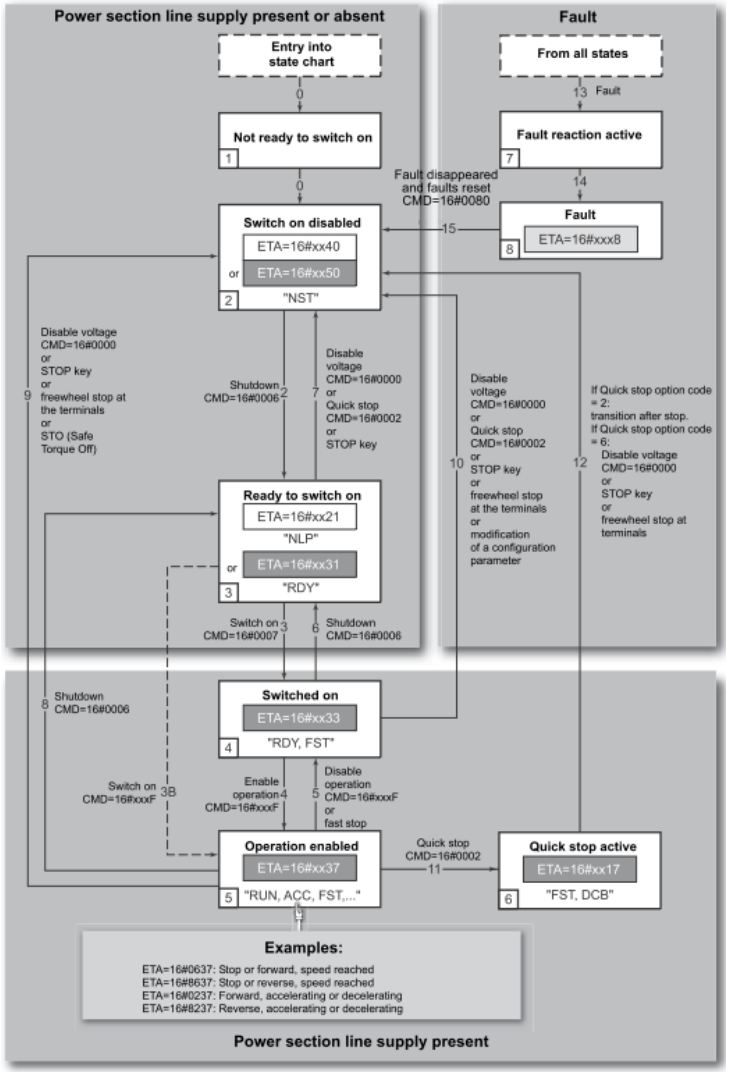

CANopen Services / PDO

ATV312

PDO telegrams are used to exchange real-time data related to the process.
PLCs refresh their inputs and outputs cyclically through PDOs (periodic variables).

The Altivar 312 features two sets of predefined PDOs:

• The first set of PDOs (**PDO1** mandatory for all modes) includes:
- one received PDO, used to control (Control word "CMDD") the drive;
- one transmitted PDO, used to monitor (Status word "ETAD") the drive.
PDO 1 are asynchronous and the transmitted PDO is only sent when the value of its data changes.

• The second set of PDOs (**PDO6** for velocity mode) includes:
- one received PDO, used to control the drive (Control word "CMDD" and Velocity reference "LFRD"); in addition, it can be configured to include two additional variables; Control word "CMDD" and Velocity reference "LFRD" can also be replaced with any two other variables with write access rights;
- one transmitted PDO, used to monitor the drive (Status word "ETAD" and Velocity actual value "RFRD"); in addition, it can be configured to include two additional variables; Status word "ETAD" and Velocity actual value "RFRD" can also be replaced with any two other variables.

The communication mode of PDO 6 can be set by the user, depending on their needs: asynchronous (as for PDO 1) or cyclic, based on the reception of a synchronization object (SYNC). A third mode is also possible, acyclic synchronous, in which the transmitted PDO is sent whenever the value of its data changes, but only during the synchronous “window” allowed by the SYNC object.
In asynchronous mode "Inhibit time" and "Event timer" can be modified.

ATV32

The Altivar 32 has 3 predefined PDO sets:
• PDO1 is in accordance with the CiA402 specification: velocity mode,
• PDO2 is fully configurable by the user. By default, this PDO is disabled,
• PDO3 is linked to the communication scanner. By default, this PDO is disabled.

The first PDO is by default compliant with the **PDO1** of the Velocity Mode of the CiA402. It is asynchronous and contains two data: the control word (6040h / ATV32 CMD) and the target velocity (6042h / ATV32 LFRD) for the input (from PLC to device) and the status word (6041h / ATV32 ETA) and the control effort (6044h / ATV32 RFRD) for the output (from device to PLC).
PDO detailed properties:
• The COB-Id of the transmit and receive PDO1 is fully configurable.
• The transmission type of the receive and transmit PDO are fully configurable.
• The mapping of the receive and transmit PDO are fully configurable

The second PDO set (**PDO2**) is deactivated by default and can be configured in full (1 to 4 words of the user's choice). It is reserved for adjustments and for additional control and monitoring functions. By default, TPD02
(transmit) and RPD02 (receive) are disabled and not configured

The third PDO set (**PDO3**) is reserved. Deactivated by default, it cannot be configured and comprises:
• RPDO3 (receive), containing 4 input words of the communication scanner NC1 to NC4
• TPDO3 (transmit), containing 4 output words of the communication scanner NM1 to NM4

RPDO1, TPDO1, RPDO2, TPDO2, RPDO3, and TPDO3 can each be enabled or disabled independently. Each PDO can be activated or deactivated using bit 31 of its COB-ID. Set this bit to 1 to deactivate the PDO. Reset it to zero to activate the PDO.
By default, these three PDO are asynchronous, although the transmission mode of each PDO can be reconfigured by the user in accordance with requirements:
• Asynchronous mode (255): The transmit PDO is only sent when the value of its data changes. In this mode, the “inhibit time” and “event timer” can be modified in order to adjust the PDO transmission frequency on the bus.
• Cyclic synchronous mode (1…240): the transmit PDO is sent each time a synchronization object (SYNC) is received or when a preconfigured number of synchronization objects (between 1 and 240) are received.
• Acyclic synchronous mode (0): the transmit PDO is sent each time the value of its data changes, but only during the synchronous “window” authorized by the next synchronization object (SYNC, not available for the receive PDO).

CANopen Services / PDO

ATV312

PDO1 (COB-ID = 16#180 + Node-ID / 16#200 + Node-ID)

Client ⇦ Drive

COB-ID	Byte 0	Byte 1
384 (16#180) +Node-ID	Status word "ETAD"	
	LSB	MSB

Client ⇨ Drive

COB-ID	Byte 0	Byte 1
512 16#200 +Node-ID	Control word "CMDD"	
	LSB	MSB

PDO6 (COB-ID = 16#280 + Node-ID / 16#300 + Node-ID)

Client ⇦ Drive

COB-ID	Byte 0	Byte 1	Byte 2	Byte 3	Byte 4	Byte 5	Byte 6	Byte 7
640 (16#280) +Node-ID	Altivar variable (default: Status word "ETAD")		Altivar variable (default: velocity actual value "RFRD")		Altivar variable (default: no object)		Altivar variable (default: no object)	
	LSB	MSB	LSB	MSB	LSB	MSB	LSB	MSB

Client ⇨ Drive

COB-ID	Byte 0	Byte 1	Byte 2	Byte 3	Byte 4	Byte 5	Byte 6	Byte 7
768 16#300 +Node-ID	Altivar variable (default: Control word "CMDD")		Altivar variable (default: Velocity reference "LFRD")		Altivar variable (default: no object)		Altivar variable (default: no object)	
	LSB	MSB	LSB	MSB	LSB	MSB	LSB	MSB

ATV32

PDO1 (COB-ID = 16#180 + Node-ID / 16#200 + Node-ID)

Master ⇦ Drive

COB-ID	Byte 0	Byte 1	Byte 2	Byte 3	Byte 4	Byte 5	Byte 6	Byte 7
384 (16#180) +Node-ID	Altivar variable (by default: status word "ETA")		Altivar variable (by default: output speed "RFRD")		Altivar variable (by default: no parameter)		Altivar variable (by default: no parameter)	
	LSB	MSB	LSB	MSB	LSB	MSB	LSB	MSB

Master ⇨ Drive

COB-ID	Byte 0	Byte 1	Byte 2	Byte 3	Byte 4	Byte 5	Byte 6	Byte 7
512 (16#200) +Node-ID	Altivar variable (by default: control word "CMD")		Altivar variable (by default: speed target "LFRD")		Altivar variable (by default: no parameter)		Altivar variable (by default: no parameter)	
	LSB	MSB	LSB	MSB	LSB	MSB	LSB	MSB

PDO2 (COB-ID = 16#280 + Node-ID / 16#300 + Node-ID)

Master ⇦ Drive

COB-ID	Byte 0	Byte 1	Byte 2	Byte 3	Byte 4	Byte 5	Byte 6	Byte 7
640 (16#280) +Node-ID	Altivar variable (by default: no parameter)		Altivar variable (by default: no parameter)		Altivar variable (by default: no parameter)		Altivar variable (by default: no parameter)	
	LSB	MSB	LSB	MSB	LSB	MSB	LSB	MSB

Master ⇨ Drive

COB-ID	Byte 0	Byte 1	Byte 2	Byte 3	Byte 4	Byte 5	Byte 6	Byte 7
768 (16#300) +Node-ID	Altivar variable (by default: no parameter)		Altivar variable (by default: no parameter)		Altivar variable (by default: no parameter)		Altivar variable (by default: no parameter)	
	LSB	MSB	LSB	MSB	LSB	MSB	LSB	MSB

PDO3 (COB-ID = 16#380 + Node-ID / 16#400 + Node-ID)

Master ⇦ Drive

COB-ID	Byte 0	Byte 1	Byte 2	Byte 3	Byte 4	Byte 5	Byte 6	Byte 7
896 (16#380) +Node-ID	Output word of the NM1 Communication scanner		Output word of the NM2 Communication scanner		Output word of the NM3 Communication scanner		Output word of the NM4 Communication scanner	
	LSB	MSB	LSB	MSB	LSB	MSB	LSB	MSB

Master ⇨ Drive

COB-ID	Byte 0	Byte 1	Byte 2	Byte 3	Byte 4	Byte 5	Byte 6	Byte 7
1024 (16#400) +Node-ID	Input word of the NC1 Communication scanner		Input word of the NC2 Communication scanner		Input word of the NC3 Communication scanner		Input word of the NC4 Communication scanner	
	LSB	MSB	LSB	MSB	LSB	MSB	LSB	MSB

CANopen Services / PDO

ATV312

							Transmission type		
							Synchronously		Asynch
	Word 1	**Word 2**	**Word 3**	**Word 4**	**Mapping**	**Default cob-ID**	**cyclic**	**acyclic**	
Tx PDO1	Status word "ETAD"	-	-	-	Not modifiable	Activated 384 16#00000180 +Node-ID	-	-	✓
Rx PDO1	Control word "CMDD"	-	-	-	Not modifiable	Activated 512 16#00000200 +Node-ID	-	-	✓
Tx PDO6	Status word "ETAD"	Velocity actual value "RFRD"	Default: no object	Default: no object	Modifiable	Deactivated 640 16#80000280 +Node-ID	✓	✓	✓
Rx PDO6	Control word "CMDD"	Velocity reference "LFRD"	Default: no object	Default: no object	Modifiable	Deactivated 768 16#80000300 +Node-ID	✓	✓	✓

CANopen Services / PDO

ATV32

							Transmission type		
							Synchronously		Asynch
	Word 1	**Word 2**	**Word 3**	**Word 4**	**Mapping**	**Default cob-ID**	**cyclic**	**acyclic**	
Tx PDO1	Status word "ETAD"	Velocity actual value "RFRD"	Default: no object	Default: no object	Modifiable	Activated 384 16#00000180 +Node-ID	✓	✓	✓
Rx PDO1	Control word "CMDD"	Velocity reference "LFRD"	Default: no object	Default: no object	Modifiable	Activated 512 16#00000200 +Node-ID	✓	✓	✓
Tx PDO2	Default: no object	Default: no object	Default: no object	Default: no object	Modifiable	Deactivated 640 16#80000280 +Node-ID	✓	✓	✓
Rx PDO2	Default: no object	Default: no object	Default: no object	Default: no object	Modifiable	Deactivated 768 16#80000300 +Node-ID	✓	✓	✓
Tx PDO3	Output word of the NM1 Communication scanner	Output word of the NM2 Communication scanner	Output word of the NM3 Communication scanner	Output word of the NM4 Communication scanner	Not modifiable	Deactivated 640 16#80000380 +Node-ID	✓	✓	✓
Rx PDO3	Input word of the NC1 Communication scanner	Input word of the NC2 Communication scanner	Input word of the NC3 Communication scanner	Input word of the NC4 Communication scanner	Not modifiable	Deactivated 768 16#80000400 +Node-ID	✓	✓	✓

CANopen Services / SDO

SDO are similar to ATV312 and ATV32

SDO service (COB-ID = 16#580 + Node-ID / 16#600 + Node-ID)

Request: Client ⇨ Drive

COB-ID	Byte 0	Byte 1	Byte 2	Byte 3	Byte 4	Byte 5	Byte 6	Byte 7
1536 (16#600) +Node-ID	Request code	Object index		Object sub-index	Request data			
		LSB	MSB		Bits 7-0	Bits 15-8	Bits 23-16	Bits 31-24

Response: Client ⇦ Drive

COB-ID	Byte 0	Byte 1	Byte 2	Byte 3	Byte 4	Byte 5	Byte 6	Byte 7
1408 (16#580) +Node-ID	Response code	Object index		Object sub-index	Response data			
		LSB	MSB		Bits 7-0	Bits 15-8	Bits 23-16	Bits 31-24

Request code	Description of the command	Byte 4	Byte 5	Byte 6	Byte 7
16#23	Write data 4 bytes in length (e.g., UNSIGNED 32)	Bits 7-0	Bits 15-8	Bits 23-16	Bits 31-24
16#2B	Write data 2 bytes in length (e.g., UNSIGNED 16)	Bits 7-0	Bits 15-8	16#00	16#00
16#2F	Write data 1 byte in length (e.g., UNSIGNED 8)	Bits 7-0	16#00	16#00	16#00
16#40	Read data 1/2/4 bytes in length	16#00	16#00	16#00	16#00
16#80	Cancel current SDO command (1)	16#00	16#00	16#00	16#00

Response code	Description of the response	Byte 4	Byte 5	Byte 6	Byte 7
16#43	Read data: 4 bytes of data: response (1)	Bits 7-0	Bits 15-8	Bits 23-16	Bits 31-24
16#4B	Read data: 2 bytes of data: response (1)	Bits 7-0	Bits 15-8	16#00	16#00
16#4F	Read data: 1 byte of data: response (1)	Bits 7-0	16#00	16#00	16#00
16#60	Write data 1/2/4 bytes in length: response	16#00	16#00	16#00	16#00
16#80	Detected error sending cancellation code (2)	Bits 7-0	Bits 15-8	Bits 23-16	Bits 31-24

(1)If you use the SDO service to read a multi-byte data, such as the “manufacturer device name” (parameter 16#1008: 16#00), a segmented transfer will be initiated between the Client and the Drive.
The 16#80 “Request code” is designed to stop this kind of transfer.
(2)The response data (bytes 4 to 7) corresponds to a 32-bit “abort code”; the list of ATV312 and ATV32 supported abort codes are described in each CANopen manual.

CANopen Services / NMT

NMT state chart are similar to ATV312 and ATV32

SDO service (COB-ID = 16#000)

Client ⇨ Drive

COB-ID	Byte 0	Byte 1
0 (16#000)	Command Specifier (CS)	Node-ID (1)

Command Specifier (CS)	Meaning
1 (16#01)	Start_Remote_Node
2 (16#02)	Stop_Remote_Node
128 (16#80)	Enter_Pre-Operational_State
129 (16#81)	Reset_Node
130 (16#82)	Reset_Communication

(1)If Node-ID = 0, the “Command Specifier” is broadcasted to all CANopen® slaves (ATV312 and ATV32 included); each one must then execute this NMT command, thus passing the corresponding transition (see below).

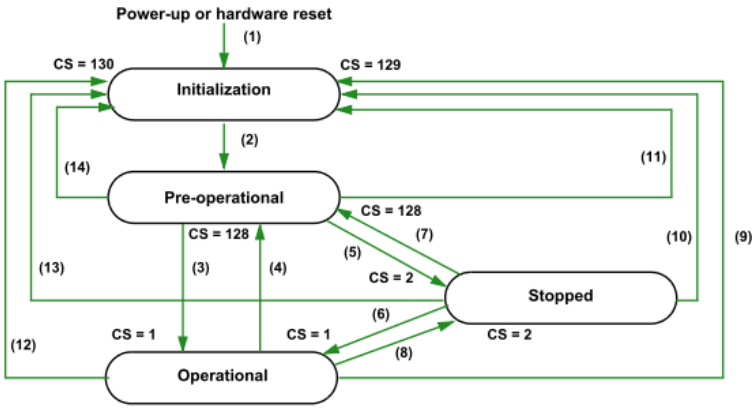

Transition	Description
(1)	At Power on, the initialisation state is entered autonomously
(2)	Once initialisation is finished, the Pre-Operational state is automatically entered
(3), (6)	Start_Remote_Node
(4), (7)	Enter_Pre-Operational_State
(5), (8)	Stop_Remote_Node
(9), (10), (11)	Reset_Node
(12), (13), (14)	Reset_Communication

Depending on the communication state of the drive, the following services are available:

	Initialising	Pre-operational	Operational	Stopped
PDO			X	
SDO		X	X	
Synchronisation (SYNC)		X	X	
Emergency		X	X	
Boot-Up	X		X	
Network Management		X	X	X

CANopen Services / Node Guarding

Node Guarding configuration is similar to ATV312 and ATV32 (COB-ID = 16#700 + Node-ID)

Master → Drive

The Client polls the drive and any other NMT slave at regular time intervals using “remote transmit requests.” Each NMT slave is assigned a specific time period for this poll, called “life time”. Its value may be changed via the two parameters “guard time” (16#100C: 16#00) and “life time factor” (16#100D: 16#00). The “life time” is given by the “guard time” multiplied by the “life time factor”.

If, once the “Life Time” has expired, the drive has not received the RTR:

- It triggers a “Life Guarding” detected fault
- it sends an emergency telegram (EMCY)

Master ← Drive

COB-ID	Byte 0 = NMT information	
1792 (16#700) + Node-Id	Bit 7	Bit 6-0
	Toggle bit	Node State

The drive response indicates its NMT state via the “NMT information” field, described here:
Bits 6-0 (node state): Current NMT state of the drive:

- Initialization (16#00),
- Stopped (16#04),
- Operational (16#05),
- or Pre-operational (16#7F).

Bit 7 (toggle bit): The value of this bit must alternate from one drive response to the other. The value of the toggle bit for the first response following activation of the Node Guarding service is 0. This bit can only be reset to 0 by sending the “Reset_Communication” command to the drive. If a response is received with the same toggle bit value as the previous response, the new response is treated as if it had not been received.

Parameter index

Parameter	Index	Sub-index	Format	Unit
Guard time	16# 100C	16# 00	16-bit unsigned integer	1 ms
Life time factor	16# 100D	16# 00	unsigned byte	__

CANopen Services / Heartbeat

Heartbeat configuration is similar to ATV312 and ATV32 (COB-ID = 16#700 + Node-ID)

As an alternative to the Node Guarding protocol, described in the previous chapter, the heartbeat protocol can be used to monitor the communication between a Client and the Drive.

Only one of these two protocols may be active at any given time!

Master → Drive
Contrary to the Node Guarding Protocol, the Heartbeat Protocol does not require the Client to send frames, not even “remote frames,” to any device.

Master ← Drive

COB-ID	Byte 0
1792 (16#700) +Node-ID	Heartbeat producer status

Each “Heartbeat Producer” sends Heartbeat messages at regular intervals (the “Producer Heartbeat Time” 16#1017/00).
All “Heartbeat Consumers” check that they receive these messages in a time less than the “Consumer Heartbeat Time” (16#1016/01).
The “Producer Heartbeat Time” must be less than the “Consumer Heartbeat Time”.
If the drive has been configured as a consumer and a period of time equal to the “Consumer Heartbeat Time” elapses without a “Heartbeat message” being received, the drive will trigger a “Heartbeat” event and send an emergency telegram (EMCY).
If CANopen is the active channel, a CANopen detected fault (COF) will be triggered.
The “Heartbeat message” sent from the drive contains a “Heartbeat Producer state” field (byte 0), described here:

Bit 7 = Reserved: This bit is equal to 0.
Bits 6-0 = Heartbeat Producer state: Current NMT state of the drive:

- Initialization (16#00).
- Stopped (16#04).
- Operational (16#05).
- or Pre-operational (16#7F).

CANopen Services / EMCY

EMCY object is similar to ATV312 and ATV32 (COB-ID = 16#080 + Node-ID)

Client ⇦ Drive

COB-ID	Byte 0	Byte 1	Byte 2	Byte 3	Byte 4	Byte 5	Byte 6	Byte 7
128 (16#080) +Node-ID	Emergency Error Code		Error register	0	0	0	0	0
	LSB	MSB	=0 (no error) =1 (error)					

An EMCY object is sent by the drive to other CANopen devices, with a high priority, every time a detected fault appears (byte 2/bit 0 = 1) or disappears (byte 2/bit 0 = 0). This is the case in particular for “Heartbeat” or “Life Guard” type detected faults. An Emergency object is never repeated.

ATV312

The Emergency Error Code is the same as the variable "Fault code" ERRD (CANopen index = 16#603F), refer to the ATV312 user’s manual "Communication variables".

8606	603F	**ERRD**	R	**Fault code** **CiA 402: Error code** **IEC 61800-7: Malfunction code** 0000H = "nOF": No fault code saved 1000H = "CrF": Capacitor pre-charge detected fault or = "OLF": Motor overload or = "SOF": Motor overspeed 2310H = "OCF": Overcurrent 2320H = "OCF": Impeding short-circuit or = "OCF": Power module, specific to ATV312●D15● 2330H = "SCF": Motor short-circuit (to ground) 2340H = "OCF": Motor short-circuit (phase to phase) 3110H = "OSF": Line supply overvoltage 3120H = "USF": Line supply undervoltage 3130H = "PHF": Line supply phase loss 3310H = "ObF": DC bus overvoltage or = "OPF": Motor phase loss or = "OPF": Motor phase loss - 3 phases 4210H = "OHF": Drive overheating 5520H = "EEF": EEPROM memory 6100H = "InF": Internal 6300H = "CFF": Incorrect configuration (parameters) or = "CFI": Invalid configuration (parameters) 7300H = "LFF": 4 - 20 mA loss 7510H = "SLF": Modbus communication interruption 8100H = "COF": Communication interruption, line 2 (CANopen) 9000H = "EPF": External fault FF00H = "tnF": Auto-tuning was unsuccessful FF01H = "bLF": Brake control 7520H = "ILF": Optional internal link 7510H = "CNF": Communication interruption on the communication card

ATV32

The Emergency Error Code is the same as the variable "Fault code" ERRD (CANopen index = 16#2038/7), refer to the ATV32 CANopen manual

EMCY detected error code (Errd)	Description (accessible also in d P / see programming manual)
16#0000	[No fault] (nOF)
16#1000	[Precharge] (CrF)
16#1000	[Motor overload] (OLF)
16#2230	[IGBT short circuit] (SCF4)
16#2310	[Overcurrent] (OCF)
16#2311	[Proc.Overload Flt] (OLC)
⋮	⋮
16#7520	[int. com.link] (ILF)
16#7520	[Com. network] (CnF)
16#7530	[PC com.] (SLF2)
16#8100	[CAN com.] (COF)
16#9000	[External flt-LI/Bit] (EPF1)
16#9000	[External fault com.] (EPF2)
16#FF00	[Auto-tuning] (tnF)
16#FF01	[Brake control] (bLF)
16#FF02	[Torque/current lim] (SSF)
16#FF03	[Pr.Underload.Flt] (ULF)
16#FF03	[Safety fault] (SAFF)
16#FF80	[Load fault] (dLF)

CANopen Object 1011

Object 1011h : Restore default parameters

With this object the default value of parameter according to the communication or device profile are restored. By read access the device provides information about its capabilities to restore these value.

Several parameter groups are distinguished:
Sub-Index 0 contains the largest Sub-index that is supported.
Sub-Index 1 refers to all parameters that can be restored
Sub-Index 2 refers to communication related parameters (Index 1000h - 1FFFh manufacturer specific communication parameters).
Sub-Index 3 refers to application related parameters (Index 6000h - 9FFFh manufacturer specific application parameters).

On reception of the correct signature in the appropriate sub-index the device restores the default parameters.

If supported by PLC, this object is send on slave initialization. So on each power ON or connection of CANopen cable

ATV312

The ATV312 does not support this object. If PLC sends this object 1011 to the ATV312, the drive will answer by an abort code (on SDO) but will continue to work.

ATV32

The ATV32 support this object by default. If the PLC sends the 1011 object sub index 1, the ATV32 will do a factory setting.
If ATV32 parameter has been already configured, the configuration will be lost.

DANGER

UNINTENDED EQUIPMENT OPERATION

. To avoid to lose the drive configuration on each CANopen initialization, apply the following instructions:

- if the PLC allow to deactivate the 1011 object: On PLC side, deactivate this 1011 object for ATV32 slaves.
- if the PLC does not allow to deactivate the 1011 object: contact the Schneider Electric services to deactivate the object in the drive (for ATV32 version ≥ V1.3ie05).

Failure to follow these instructions will result in death or serious injury.

CANopen Object 1011

Deactivation of 1011 in PLC side

The procedure can depends of PLC type. Example here with Unity and M340 PLC

No restore

Restore communication parameters (1011sub02)

Restore parameters (1011sub01)

For ATV32 slaves, to avoid the factory setting on CANopen initialization, do not select « restore all 1011sub01»
Select restore communication 1011sub02 or no restore

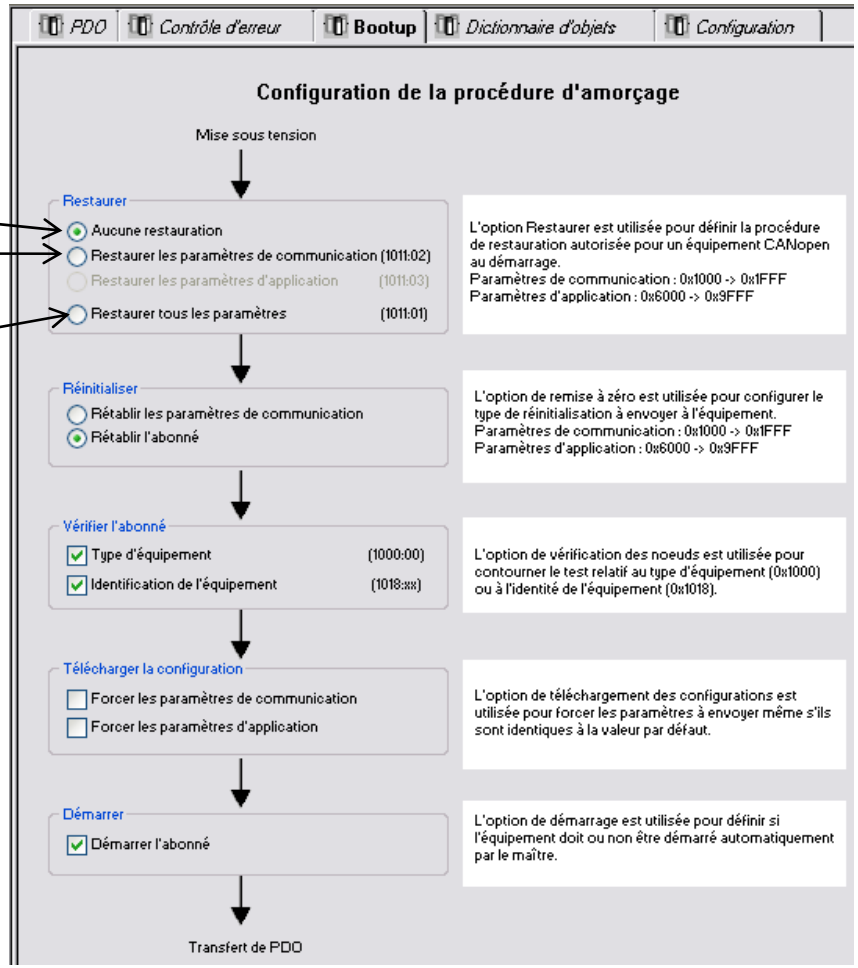

Example

- Cycle
- ATV32 EDS file in Unity
- PDO configuration in PLC
- Command and Status description
- PLC Program / DriveCom
- Key points

Example: Cycle

PLC : M340 configured with Unity V6.1

Automatic Forward/Reverse cycle

- Start give by push button. Cycle is automatically repeat.
- Quick stop button to stop cycle.

The PLC program was done on ATV312 to command via DriveCom sequence.
See the 2 *.sta files available with this PDF. (ATV312_CANopen_m340_20130514.sta and ATV32_CANopen_m340_20130514.sta)

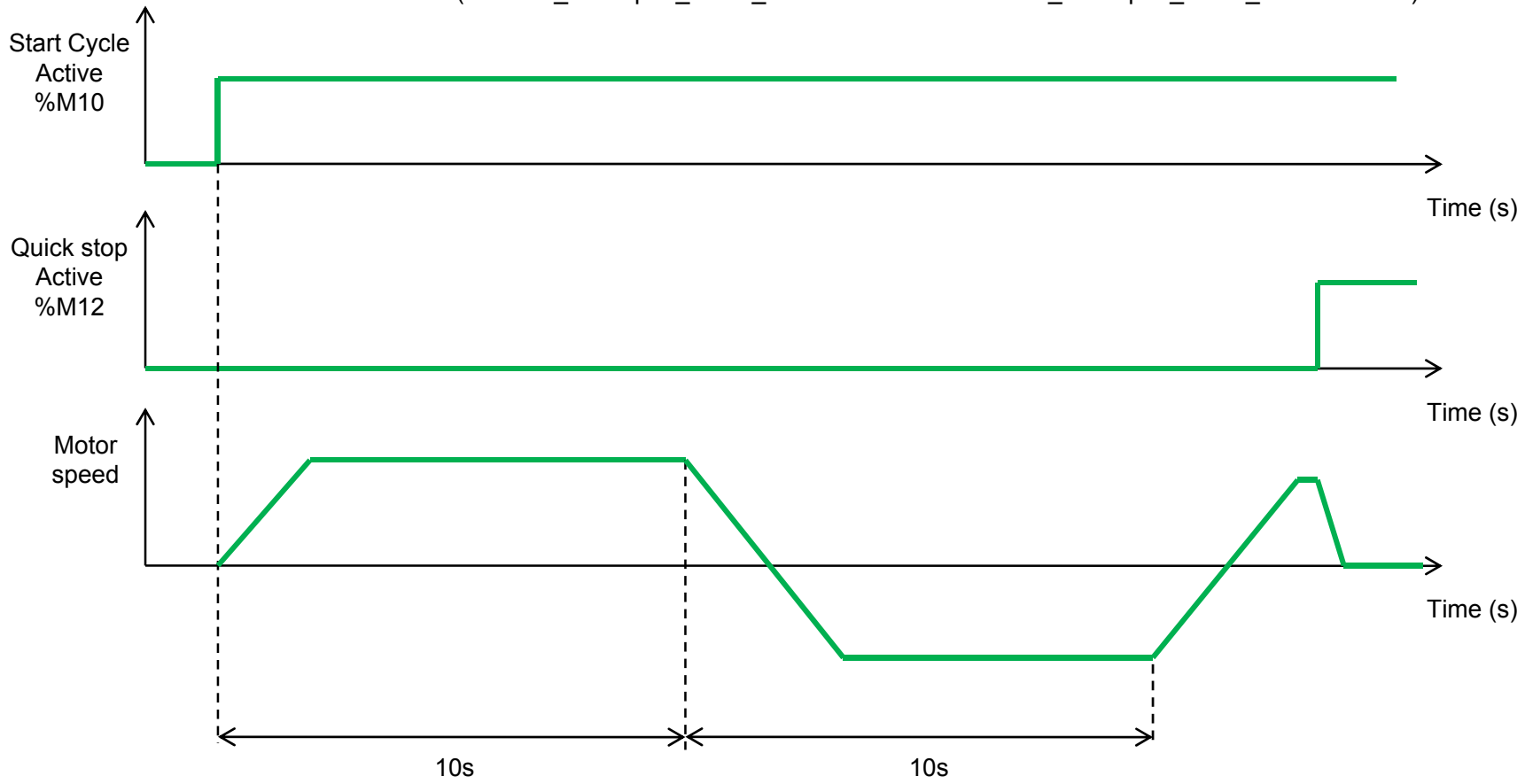

Example: ATV32 EDS file in Unity

This is done in Unity Hardware Catalog manager

PDO1 already contains the command, reference, status and motor speed.
The PDO3 is also mapped (because fixed) but not activated.

The %MWxx for each PDO can be sort in using the option I/O Object Sort.

By default, all parameters described in the EDS file are checked in language interface column.
If all these parameters are checked, when the ATV32 is integrated in the PLC, it is needed to reserve a lot of memory word in the PLC.
To avoid this reservation, uncheck the parameter that you will not need in PDO mapping. You will only reserve the needed word in PLC.

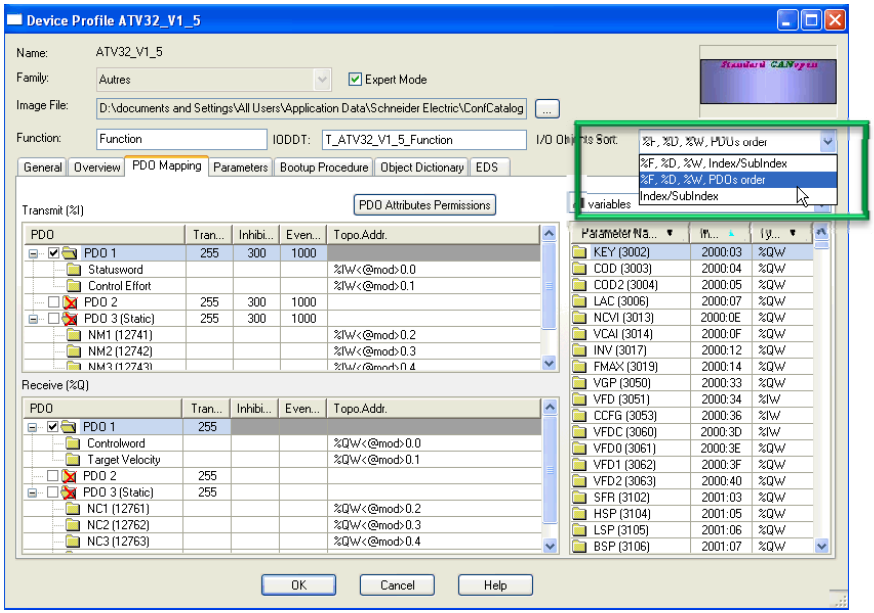

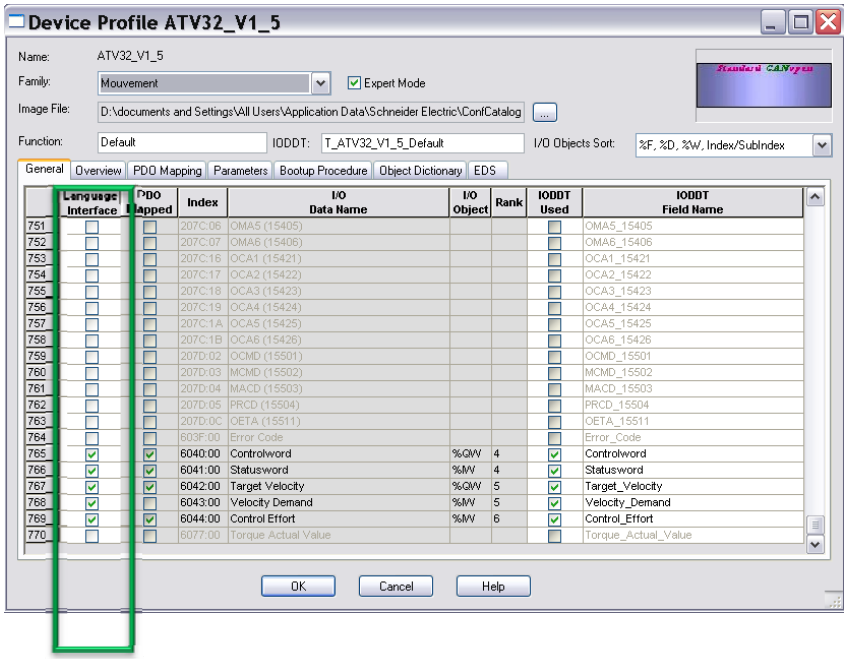

Example: PDO configuration in PLC

ATV312

ATV312 integration in the PLC
- ATV312 node 1
- Transmission speed 250Kbps

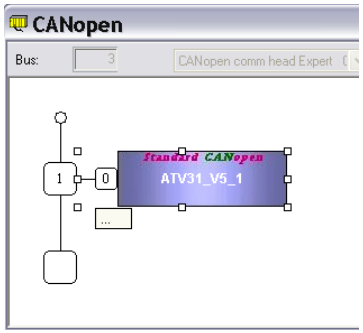

ATV312 PDO
- Command word on Receive PDO1
- target velocity on Receive PDO6
- Status Word on Transmit PDO1
- motor speed on Transmit PDO6

PDO | Contrôle d'erreur | Bootup | Dictionnaire d'objets | Configuration

Emission (%I) Masquer les PDO vides

PDO	Type d'ém...	InhibitTime	Event Tim...	Symbole	Adr. topo.	%M..	COBID	Index
PDO 1 (Statique)	255	50	100				16#181	
Drivecom status register					%IW\3.1\0.0.0.0	%MW0		6041:00
PDO 6	255	50	100				16#681	
Control effort					%IW\3.1\0.0.0.1	%MW1		6044:00

Réception (%Q) Masquer les PDO vides

PDO	Type d'ém...	InhibitTime	Event Tim...	Symbole	Adr. topo.	%M..	COBID	Index
PDO 1 (Statique)	255						16#201	
Drivecom command reg.					%QW\3.1\0.0.0.0	%MW32		6040:00
PDO 6	255						16#682	
Target velocity					%QW\3.1\0.0.0.1	%MW33		6042:00

ATV32

ATV32 integration in the PLC
- ATV32 node 1
- Transmission speed 250Kbps

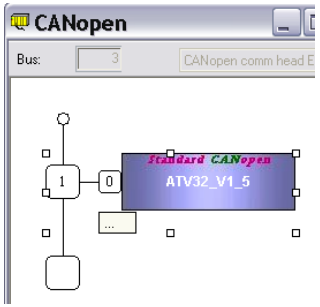

ATV32 PDO
- Command word and Target velocity on Receive PDO1
- Status Word and motor speed on Transmit PDO1

PDO | Contrôle d'erreur | Bootup | Dictionnaire d'objets | Configuration

Emission (%I) Masquer les PDO vides

PDO	Type d'ém...	InhibitTime	Event Tim...	Symbole	Adr. topo.	%M..	COBID	Index
PDO 1	255	300	1000				16#181	
Statusword					%IW\3.1\0.0.0.0	%MW0		6041:00
Control Effort					%IW\3.1\0.0.0.1	%MW1		6044:00
PDO 2	255	300	1000				-	
PDO 3 (Statique)	255	300	1000				-	
NM1 (12741)					%IW\3.1\0.0.0.2	%MW2		2061:2A
NM2 (12742)					%IW\3.1\0.0.0.3	%MW3		2061:2B
NM3 (12743)					%IW\3.1\0.0.0.4	%MW4		2061:2C
NM4 (12744)					%IW\3.1\0.0.0.5	%MW5		2061:2D

Réception (%Q) Masquer les PDO vides

PDO	Type d'ém...	InhibitTime	Event Tim...	Symbole	Adr. topo.	%M..	COBID	Index
PDO 1	255						16#201	
Controlword					%QW\3.1\0.0.0.0	%MW32		6040:00
Target Velocity					%QW\3.1\0.0.0.1	%MW33		6042:00
PDO 2	255						-	
PDO 3 (Statique)	255						-	
NC1 (12761)					%QW\3.1\0.0.0.2	%MW34		2061:3E
NC2 (12762)					%QW\3.1\0.0.0.3	%MW35		2061:3F
NC3 (12763)					%QW\3.1\0.0.0.4	%MW36		2061:40
NC4 (12764)					%QW\3.1\0.0.0.5	%MW37		2061:41

Example: PDO configuration in PLC

ATV32

Deactivation of 1011 object to avoid factory setting on CANopen initialization

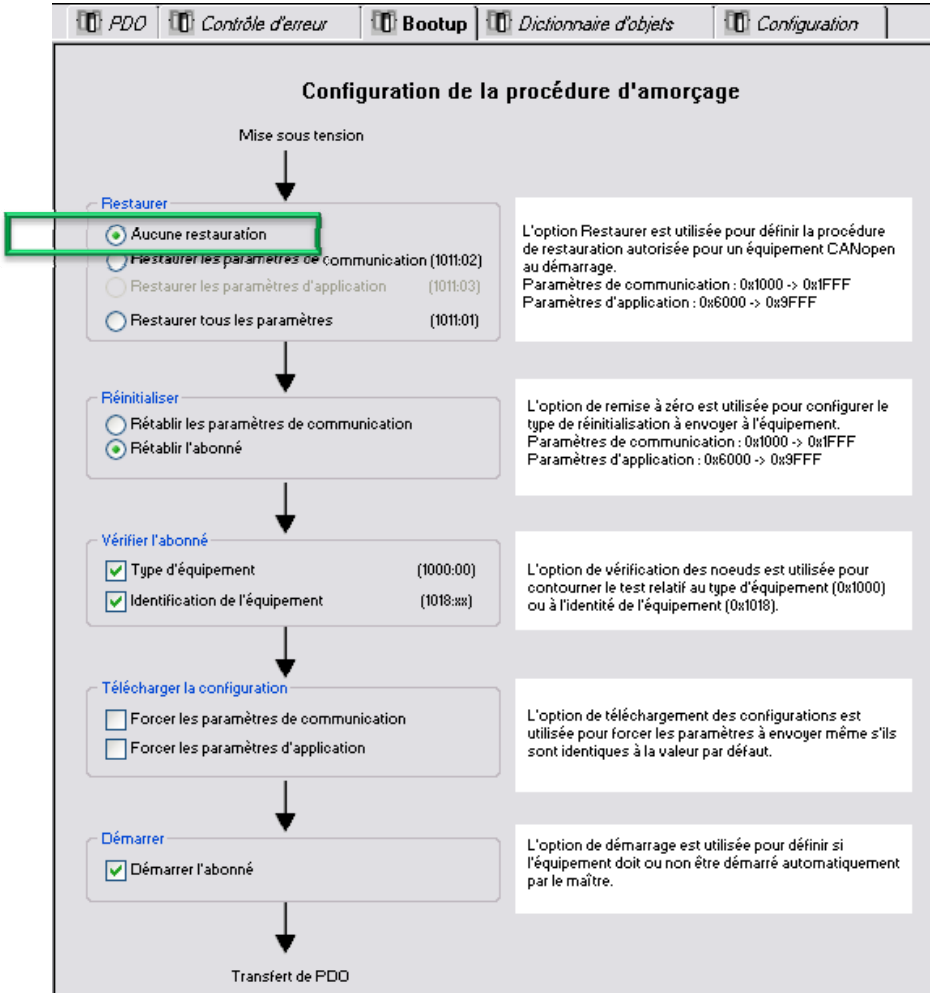

Example: Command and Status description

The value of status word changes between the ATV312 and ATV32

ATV312

CMD control word (W8501)

bit 7	bit 6	bit 5	bit 4
Fault state reset	0	0	0

bit 3	bit 2	bit 1	bit 0
Enable operation	Quick stop (active at 0)	Enable voltage	Switch on

bit 15	bit 14	bit 13	bit 12
(1)	(1)	(1)	(1)

bit 11	bit 10	bit 9	bit 8
(1)	0	0	0

(1)This bit action depends on the LAC "Access levels" parameter and the functions configured by the user.
For example, to use bit 15 to switch the ramp, simply configure LAC = L3 (Access to advanced functions and management of mixed modes) and set the "Ramp switching rPS" configuration parameter to Cd15.

ETA status word (W3201)

bit 7	bit 6	bit 5	bit 4
Alarm	Switch on disabled	Quick stop active at 0	0

bit 3	bit 2	bit 1	bit 0
Malfunction	Operation enabled	Switched on	Ready to switch on

bit 15	bit 14	bit 13	bit 12
Direction of rotation	Stop via STOP key	0	0

bit 11	bit 10	bit 9	bit 8
Reference exceeded	Reference reached	Forced local mode (active at 0)	0

ATV32

CMD control word (W8501)

bit 7	bit 6	bit 5	bit 4	bit 3	bit 2	bit 1	bit 0
Fault reset	Reserved (=0)	Reserved (=0)	Reserved (=0)	Enable operation	Quick stop	Enable voltage	Switch on
0 to 1 transition = Ack. fault				1 = Run command	0 = Emergency stop	Authorization to supply AC power	Contactor control

bit 15	bit 14	bit 13	bit 12	bit 11	bit 10	bit 9	bit 8
Manufacturer specific Assignable	Manufacturer specific Assignable	Manufacturer specific Assignable	Manufacturer specific Assignable	Manufacturer specific	Reserved (=0)	Reserved (=0)	Halt
				0 = Forward direction asked 1= Reverse direction asked			Halt

ETA status word (W3201)

bit 7	bit 6	bit 5	bit 4	bit 3	bit 2	bit 1	bit 0
Warning	Switch on disabled	Quick stop	Voltage enabled	Fault	Operation enabled	Switched on	Ready to switch on
Alarm	Power section line supply disabled	0 = Emergency stop	Power section line supply present	Fault	Running	Ready	1 = Awaiting power section line supply

bit 15	bit 14	bit 13	bit 12	bit 11	bit 10	bit 9	bit 8
Manufacturer specific Direction of rotation	Manufacturer specific Stop via STOP key	Reserved (=0)	Reserved (=0)	Internal limit active	Target reached	Remote	Reserved (=0)
				Reference outside limits	Reference reached	Command or reference via network	

Example: PLC program / DriveCom

On the left, the original program designed for ATV312.

On right, the same program with adjustment for ATV32.

ATV312

```
(*Masking Status Word*)
%MW5:= %MW0 AND 16#006F;


(*Drive in "Switch On Disabled" (ETA = 16#0040) *)
IF %MW5=16#0040 THEN
        %MW32:= 16#0006; (*Control word = 16#0006 "Shutdown" *)
END_IF;


(*Drive in "Ready to switch on" (ETA = 16#0021) *)
IF %MW5=16#0021 THEN
        %MW32:= 16#0007; (*Control word = 16#0007 "Switch On" *)
        %MW33:= 1500; (*Velocity reference in RPM*)
END_IF;


(*Drive in "Switched on" (ETA = 16#0023) *)
IF %MW5=16#0023 AND %M10 THEN
        %MW32:=16#000F; (*Control word = 16#000F "Enable Operation" in Forward direction*)
END_IF;


(*Drive in "Operation enabled" (ETA = 16#0027) *)
IF %MW5=16#0027 THEN
        IF %M11 THEN
                %MW32:=16#080F; (*Control word = 16#080F "Enable Operation" in Reverse direction*)
        END_IF;
        IF %M10 THEN
                %MW32:=16#000F; (*Control word = 16#000F "Enable Operation" in Forward direction*)
        END_IF;
        IF %M12 THEN
                %MW32:= 16#0002; (*Control word = 16#0002 "Quick Stop" to go in Quick stop active*)
        END_IF;
END_IF;


(*Drive in "Quick stop active" (ETA = 16#0007) *)
IF %MW5=16#0007 THEN
        %MW32:= 16#0000; (*Control word = 16#0000 "Disable voltage" *)
        %M12:= FALSE;
        %M10:= FALSE;
END_IF;


(*Drive in "Malfunction" (ETA = 16#0008) *)
IF %MW5=16#0008 OR %MW5=16#0028 THEN
        %MW32:= 16#0080; (*Control word = 16#0080 for Fault state reset*)
END_IF;
```

ATV32

```
(*Masking Status Word*)
%MW5:= %MW0 AND 16#006F;

(*Drive in "Switch On Disabled" *)
(*ETA = 16#0040 on ATV312 or in ATV32 if power is absent*)
(*ETA = 16#0050 on ATV32 if power is present*)
IF %MW5=16#0040 OR %MW5=16#0050 THEN
        %MW32:= 16#0006; (*Control word = 16#0006 "Shutdown" *)
END_IF;

(*Drive in "Ready to switch on" *)
(*ETA = 16#0021 on ATV312 or in ATV32 if power is absent*)
(*ETA = 16#0031 on ATV32 if power is present*)
IF %MW5=16#0021 OR %MW5=16#0031 THEN
        %MW32:= 16#0007; (*Control word = 16#0007 "Switch On" *)
        %MW33:= 1500; (*Velocity reference in RPM*)
END_IF;

(*Drive in "Switched on" *)
(*ETA = 16#0023 on ATV312*)
(*ETA = 16#0033 on ATV32*)
IF %MW5=16#0033 AND %M10 THEN
        %MW32:=16#000F; (*Control word = 16#000F "Enable Operation" in Forward direction*)
END_IF;

(*Drive in "Operation enabled" *)
(*ETA = 16#0027 on ATV312*)
(*ETA = 16#0037 on ATV32*)
IF %MW5=16#0037 THEN
        IF %M11 THEN
                %MW32:=16#080F; (*Control word = 16#080F "Enable Operation" in Reverse direction*)
        END_IF;
        IF %M10 THEN
                %MW32:=16#000F; (*Control word = 16#000F "Enable Operation" in Forward direction*)
        END_IF;
        IF %M12 THEN
                %MW32:= 16#0002; (*Control word = 16#0002 "Quick Stop" to go in Quick stop active*)
        END_IF;
END_IF;

(*Drive in "Quick stop active" *)
(*ETA = 16#0007 on ATV312*)
(*ETA = 16#0017 on ATV32*)
IF %MW5=16#0017 THEN
        %MW32:= 16#0000; (*Control word = 16#0000 "Disable voltage" *)
        %M12:= FALSE;
        %M10:= FALSE;
END_IF;


(*Drive in "Malfunction" *)
(*ETA = 16#0008 or 16#0028 on ATV312 and ATV32*)
IF %MW5=16#0008 OR %MW5=16#0028 THEN
        %MW32:= 16#0080; (*Control word = 16#0080 for Fault state reset*)
END_IF;
```

Key points

On PLC configuration

- Uncheck the ATV32 parameters not needed in PDO
- PDO mapping will be different, verify the %MW defined in the PLC
- Deactivate the 1011 object to avoid ATV32 factory setting on CANopen initialization

ATV32 manages additional Status bit, which modify the Communication profile management.

	ATV312	ATV32
Mask on ETA = 16#006F		
Switch on disable	16#0040	16#0040 or 16#0050
Ready to switch on	16#0021	16#0021 or 16#0031
Switched on	16#0023	16#0033
Operation enabled	16#0027	16#0037
Quick stop active	16#0007	16#0017
Malfunction	16#0008 or 16#0028	16#0008 or 16#0028