Panel Thickness E dim. inches (mm)	Number of Gasket
1/16 (1.6)	4
1/8 (3.2)	3
3/16 (4.8)	2
1/4 (6.4)	1

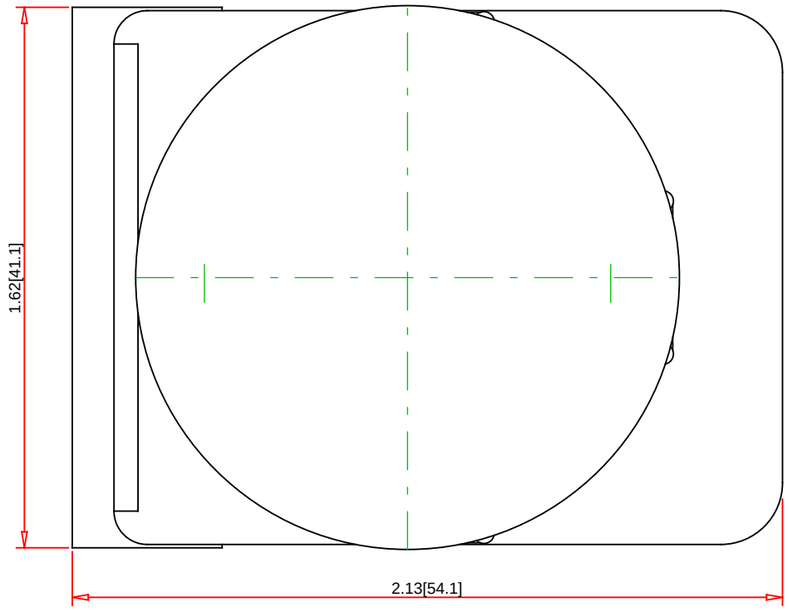

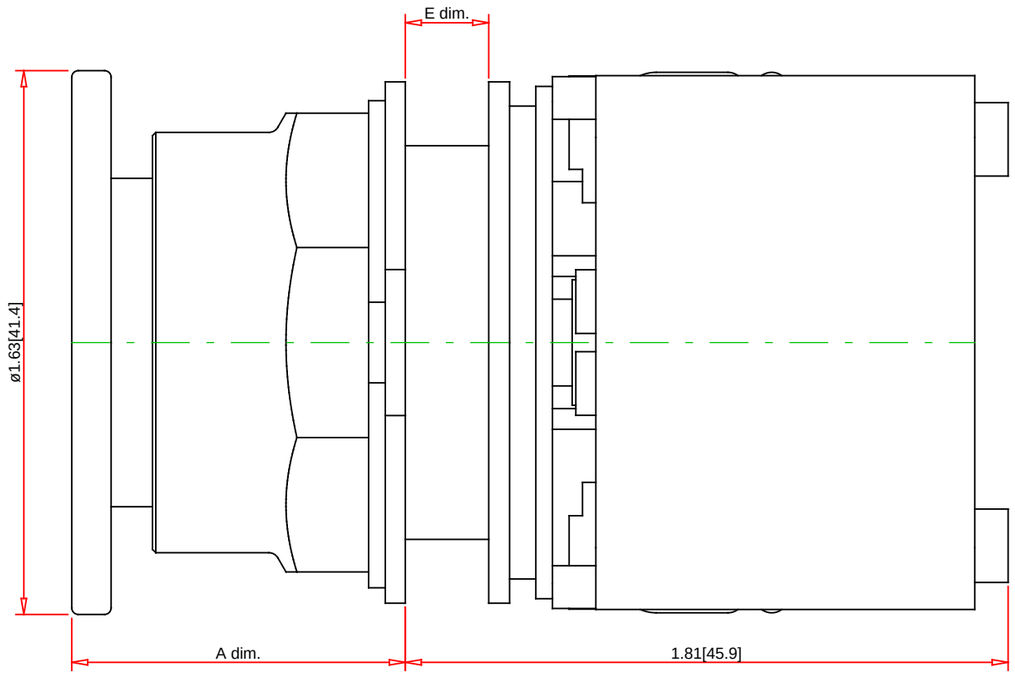

A dim. inches (mm)		
Depressed (Stop)	Midway (Neutral)	Extended (Start)
1 (25.4)	-	1 5/16 (49.2)

Note:
- Drawings Not To Scale
- Drawings Subject to Change Without Notice
- Dimensions are inches next to [Millimeters]

Part No.:

9001SKR9P35LRR

Schneider Electric United States
North American Division
Boston One Campus
800 Federal Street
Andover, MA 01810, USA
Phone:+1 8773425173
Email: CCC@us.schneider-electric.com

Technical Information:

UL File:	E78403 CCN NKCR
CSA File:	LR24590 Class 3211-03
CE Marked:	Yes
RoHS:	Yes
NEMA / IP Rating:	NEMA 1/2/3/3R/4/4X/6/12/13 Water tight, Dust tight, Oil tight and Corrosion Resistant (Indoor Use), IP66
Key Number:	
Key Removal:	n/a
Light Module Supply Voltage:	24/28V
Light Module Type:	LED (Red)
Number of Operators:	1

Specification:

Description:	30mm Push Button
Ring Nut Material:	Black Plastic
Operator Type:	Illuminated
Operator Action:	Maintained (Push/Pull)
Button/Cap Type:	Screw-On Plastic Mushroom (1.63 Inch/41mm)
Guard Type:	No Guard
Button/Cap Color:	Red
Lens Type:	not applicable
Lens Color:	not applicable
Knob Type:	not applicable
Knob Color:	n/a
Number of Positions:	2