Product data sheet
Characteristics

XUYFALNEP60080
photo-electric sensor - XUY - fork - laser - teach - 80X59mm - 12..24VDC - M8

Main

Range of product	OsiSense XU
Series name	Application
Electronic sensor type	Photo-electric sensor
Sensor name	XUY
Sensor design	Fork
Detection system	Thru beam
Emission	Infrared laser, modulated - class 1 IEC 825-1
Passage width	3.15 in (80 mm)
Passage depth	2.32 in (59 mm)
Material	Metal/plastic
Supply circuit type	DC
Wiring technique	4-wire
Discrete output type	PNP and NPN
Discrete output function	1 NO or 1 NC programmable
Electrical connection	1 male connector M8, 4 pins
Product specific application	Detection of transparent object Detection of reference marks Detection on small conveyor Detection on vibrating rail
[Sn] nominal sensing distance	3.15 in (80 mm)

Complementary

Enclosure material	Painted aluminium and polyamide/glass
Keypad type	Yellow
Minimum object diameter for detection	0.00 in (0.05 mm)
Type of output signal	Discrete
Output type	Solid state
Status LED	Adjustment mode and keypad locking 1 LED red) Output state: 1 LED (yellow)
[Us] rated supply voltage	12...24 V DC with reverse polarity protection
Supply voltage limits	10…30 V DC
Switching capacity in mA	100 mA overload and short-circuit protection)
Switching frequency	10 kHz
Maximum voltage drop	<2 V closed state)
Current consumption	40 mA no-load
Load capacitance	330 nF
Time response	-20…20 µs
Setting-up	Self teaching
Net Weight	0.42 lb(US) (0.19 kg)

Environment

Product certifications	CULus CE
Ambient air temperature for operation	-4…140 °F (-20…60 °C)
Ambient air temperature for storage	-22…176 °F (-30…80 °C)
Immunity to ambient light	10000 Lux natural light 5000 lux incandescent bulb
Vibration resistance	7 gn +/- 0.75 mm 10…55 Hz) IEC 60068-2-6

The information provided in this documentation contains general descriptions and/or technical characteristics of the performance of the products contained herein.
This documentation is not intended as a substitute for and is not to be used for determining suitability or reliability of these products for specific user applications.
It is the duty of any such user or integrator to perform the appropriate and complete risk analysis, evaluation and testing of the products with respect to the relevant specific application or use thereof.
Neither Schneider Electric Industries SAS nor any of its affiliates or subsidiaries shall be responsible or liable for misuse of the information contained herein.

Shock resistance	30 gn 11 ms) IEC 60068-2-27
IP degree of protection	IP65 conforming to IEC 60529

Ordering and shipping details

Category	22481 - SENSORS, PHOTOELECTRIC
Discount Schedule	DS2
GTIN	03389119006736
Nbr. of units in pkg.	1
Package weight(Lbs)	0.2 lb(US) (0.09 kg)
Returnability	No
Country of origin	FR

Packing Units

Unit Type of Package 1	PCE
Package 1 Height	0.59 in (1.5 cm)
Package 1 width	5.20 in (13.2 cm)
Package 1 Length	6.50 in (16.5 cm)
Unit Type of Package 2	S01
Number of Units in Package 2	12
Package 2 Weight	2.92 lb(US) (1.326 kg)
Package 2 Height	5.91 in (15 cm)
Package 2 width	5.91 in (15 cm)
Package 2 Length	15.75 in (40 cm)

Offer Sustainability

California proposition 65	WARNING: This product can expose you to chemicals including: Diisononyl phthalate (DINP), which is known to the State of California to cause cancer, and Di-isodecyl phthalate (DIDP), which is known to the State of California to cause birth defects or other reproductive harm. For more information go to www.P65Warnings.ca.gov
REACh Regulation	REACh Declaration
EU RoHS Directive	Pro-active compliance (Product out of EU RoHS legal scope) EU RoHS Declaration
Mercury free	Yes
RoHS exemption information	Yes

Contractual warranty

Warranty	18 months

XUYFALNEP60080

Dimensions

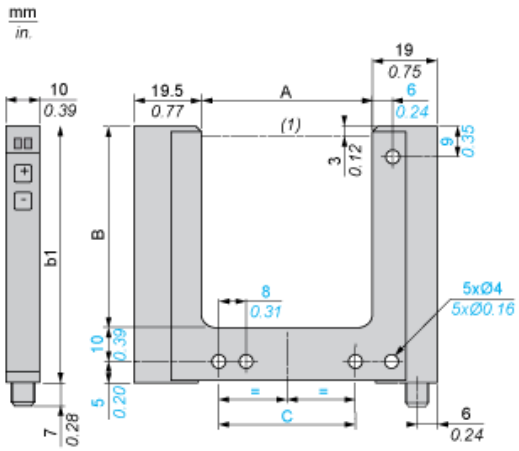

(1) Optical axis

Dimensions in mm

A	B	b1	C
80	59	74	70

Dimensions in in.

A	B	b1	C
3.15	2.32	2.91	2.76

XUYFALNEP60080

Wiring Schemes

M8 Connector

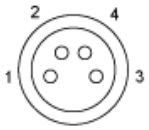

1 : BN: Brown
2 : WH: White
3 : BU: Blue
4 : BK: Black

4-Wire, PNP/NPN Outputs

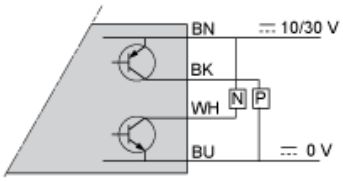

BN : Brown
WH : White
BK : Black
BU : Blue