Product data sheet
Characteristics

BMXDAO1605
discrete output module X80 - 16 outputs - triac - 100..240 V AC

Main

Range of product	Modicon X80
Product or component type	Discrete output module
Discrete output number	16
Discrete output type	Triac
Discrete output voltage	100...240 V AC

Complementary

Current per channel	0.6 A
Maximum leakage current	1.5 MA at state 0 120 V AC 60 Hz 3 mA at state 0 240 V AC 60 Hz
Maximum voltage drop	<1.5 V at state 1
Insulation resistance	> 10 MOhm 500 V DC
Response time on output	<= 1.011 ms resistive activation <= 1.011 ms resistive deactivation
Typical current consumption	79 mA 3.3 V DC
Protection type	1 external fuse fast blow
Inrush current	20 A
Maximum current per output common	2.4 A
Output current limits	0.025…4.8 A
Status LED	1 LED (green)module operating (RUN) 1 LED per channel (green)channel diagnostic Module error (ERR) 1 LED Red) 1 LED (red)module I/O

Environment

IP degree of protection	IP20
Directives	2014/35/EU - low voltage directive 2014/30/EU - electromagnetic compatibility 2012/19/EU - WEEE directive
Dielectric strength	2830 V AC 50/60 Hz 1 min
Vibration resistance	3 gn
Shock resistance	30 gn
Ambient air temperature for storage	-40…185 °F (-40…85 °C)
Ambient air temperature for operation	32…140 °F (0…60 °C)
Relative humidity	5…95 % 131 °F (55 °C) without condensation
Operating altitude	0...2000 m 2000...5000 m with derating factor

The information provided in this documentation contains general descriptions and/or technical characteristics of the performance of the products contained herein.
This documentation is not intended as a substitute for and is not to be used for determining suitability or reliability of these products for specific user applications.
It is the duty of any such user or integrator to perform the appropriate and complete risk analysis, evaluation and testing of the products with respect to the relevant specific application or use thereof.
Neither Schneider Electric Industries SAS nor any of its affiliates or subsidiaries shall be responsible or liable for misuse of the information contained herein.

Ordering and shipping details

Category	18160 - MODICON M340
Discount Schedule	PC34
GTIN	00785901795087
Nbr. of units in pkg.	1
Package weight(Lbs)	0.46 lb(US) (0.21 kg)
Returnability	Yes
Country of origin	FR

Packing Units

Unit Type of Package 1	PCE
Package 1 Height	2.17 in (5.5 cm)
Package 1 width	4.33 in (11 cm)
Package 1 Length	4.61 in (11.7 cm)
Unit Type of Package 2	S02
Number of Units in Package 2	15
Package 2 Weight	7.50 lb(US) (3.4 kg)
Package 2 Height	5.91 in (15 cm)
Package 2 width	11.81 in (30 cm)
Package 2 Length	15.75 in (40 cm)

Offer Sustainability

Sustainable offer status	Green Premium product
California proposition 65	WARNING: This product can expose you to chemicals including: Lead and lead compounds, which is known to the State of California to cause cancer and birth defects or other reproductive harm. For more information go to www.P65Warnings.ca.gov
REACh Regulation	REACh Declaration
REACh free of SVHC	Yes
EU RoHS Directive	Pro-active compliance (Product out of EU RoHS legal scope) EU RoHS Declaration
Mercury free	Yes
RoHS exemption information	Yes
China RoHS Regulation	China RoHS Declaration
Environmental Disclosure	Product Environmental Profile
Circularity Profile	End Of Life Information
WEEE	The product must be disposed on European Union markets following specific waste collection and never end up in rubbish bins.

Contractual warranty

Warranty	18 months

Modules Mounted on Racks

Dimensions

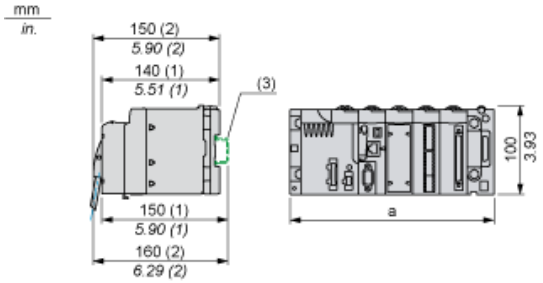

(1) With removable terminal block (cage, screw or spring).
(2) With FCN connector.
(3) On AM1 ED rail: 35 mm wide, 15 mm deep. Only possible with BMXXBP0400/0400H/0600/0600H/0800/0800H rack.

Rack references	a in mm	a in in.
BMXXBP0400 and BMXXBP0400H	242.4	09.54
BMXXBP0600 and BMXXBP0600H	307.6	12.11
BMXXBP0800 and BMXXBP0800H	372.8	14.68
BMXXBP1200 and BMXXBP1200H	503.2	19.81

Connecting the Module

Output Circuit Diagram

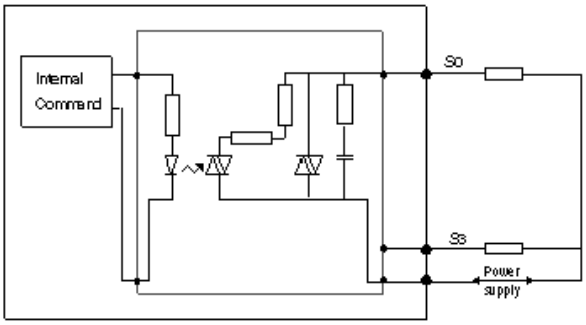

Module Connection

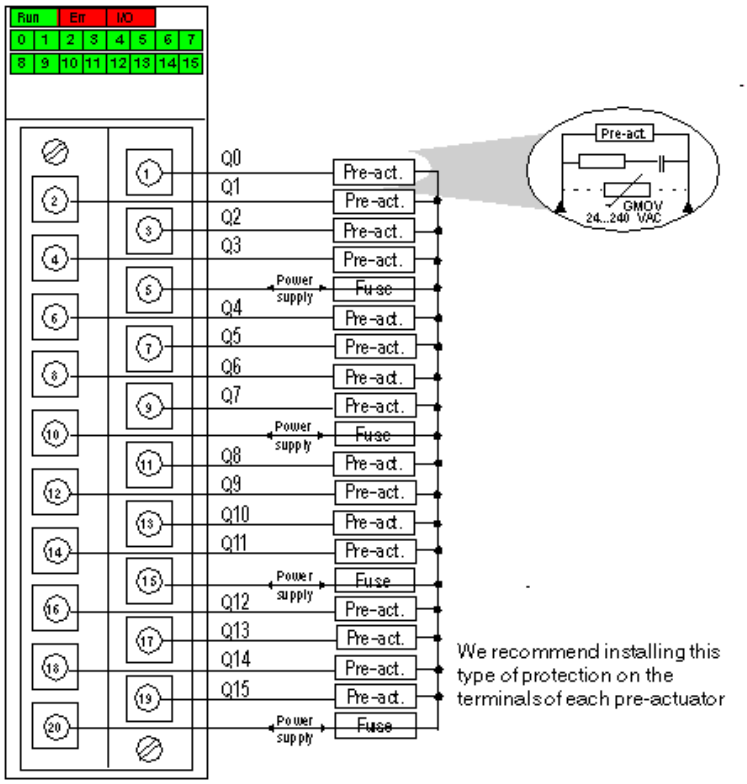

power100...240 VAC
supply
fuse 1 fast blow fuse of 3 A for each 4-channel group