KEMA Quality

TEST CERTIFICATE

Issued to:	Schneider Electric Industries SAS 35, rue Joseph Monier 92500 Rueil Malmaison France
For the product:	Empty enclosure for low-voltage switchgear and controlgear assemblies
Trade name:	Schneider Electric
Type/Model:	Thalassa PLM
Ratings:	IP66, IK 10 (plain door and PC transparent door), IK 08 (glass door), indoor / outdoor For more details see annex
Manufactured by:	Schneider Electric España, S.A. C/Llobregat, 9-11 08750 Molins de Rei-Barcelona Spain
Subject:	Type Tests
Requirements:	IEC 62208:2011 (ed. 2.0) Clauses 9.3, 9.4, 9.6, 9.7, 9.8, 9.9, 9.10, 9.12, 9.13 and 9.14
Remarks:	For details on manufacturing sites refer to annex.

This Test Certificate is granted on account of an examination by DEKRA, the results of which are laid down in report no. 2178929.01-INC, dated 1 April 2015.

The examination has been carried out on one single specimen of the product, submitted by the manufacturer. The Attestation does not include an assessment of the manufacturer's production. Conformity of his production with the specimen tested by DEKRA is not the responsibility of DEKRA.

Arnhem, 1 April 2015

Number: 2178929.100

DEKRA Certification B.V.

F.S. Strikwerda
Certification Manager

© Integral publication of this certificate and adjoining reports is allowed

Overview of product evaluation according to IEC 62208:

IEC 62208 Clause	Clause description	Tested ratings	Results
9.3	Marking		Pass
9.4	Static loads	Mounting plate: 150 kg / m^2 Plain door: 50 kg / m^2	Pass
9.6	Axial loads of metal inserts	500 N	Pass
9.7	Degree of protection against external mechanical impacts (IK code)	IK 10 (plain door and PC transparent door) IK 08 (glass door)	Pass
9.8	Degree of protection against access to hazardous parts and against ingress of solid objects and/or water (IP code)	IP66	Pass
9.9	Properties of insulating materials		
9.9.1	Thermal stability		Pass
9.9.2	Resistance to heat		Pass
9.9.3	Resistance to abnormal heat and fire		Pass
9.10	Dielectric strength	Ui 1000 Vac and 1500 Vdc	Pass
9.12	Resistance to ultra-violet (UV) radiation		Pass
9.13	Resistance to corrosion	Severity test A: internal metallic parts Severity test B: external metallic parts	Pass
9.14	Thermal power dissipation capability		Pass

Product details:

Enclosure	Description
NSYPLM32G	Monobloc wall-mounting enclosure with plain door made from ABS/PC. Closes with a 3-mm double-bar lock. Size (hxwxd): 310 x 215 x 160 mm.
NSYPLM32TG	Monobloc wall-mounting enclosure with transparent polycarbonate door made from ABS/PC. Closes with a 3-mm double-bar lock. Size (hxwxd): 310 x 215 x 160 mm.
NSYPLM3025G	Monobloc wall-mounting enclosure with plain door made from polyester reinforced with fibreglass, moulded by hot compression. Closes with two 3-mm double-bar locks. Size (hxwxd): 308 x 255 x 160 mm.
NSYPLM3025TG	Monobloc wall-mounting enclosure with transparent tempered-glass door made from polyester reinforced with fibreglass, moulded by hot compression. Closes with two 3-mm double-bar locks. Size (hxwxd): 308 x 255 x 160 mm.
NSYPLM...G	Monobloc wall-mounting enclosure with plain door made from polyester reinforced with fibreglass, moulded by hot compression. Locking system: - Enclosure height ≤ 847 mm: 2 locks with double-bar insert or 1 handle with key lock and 3-point closure. - Enclosure height 1056 mm: 1 lock with double-bar insert and 4-point closure. Size (hxwxd): From 430 x 330 x 200 mm to 1056 x 852 x 350 mm.
NSYPLM...TG	Same as NSYPLM...G with transparent tempered-glass door.
NSYPLM...VG	Same as NSYPLM...G with handle and lock with 3-point closure and key 1242 E.
NSYPLM...TVG	Same as NSYPLM...VG with transparent tempered-glass door with handle and lock with 3-point closure and key 1242 E.
NSYPLM...PG	Same as NSYPLM...G with metal mounting plate on door.
NSYPLM...BG	Same as NSYPLM...G with bakelite mounting plate on door.

Production sites:

Schneider Electric España, S.A.
C/Llobregat, 9-11
08750 Molins de Rei-Barcelona
Spain
(polyester products)

Besser Hungária KFT
Váci út 81 IV EM
1056 Budapest
Hungary
(ABS/PC products)

Applicant	:	Schneider Electric Industries SAS 35, rue Joseph Monier 92500 Rueil Malmaison France
Application Date	:	8 January 2015
Order Number	:	2178929.00-INC
Product	:	Empty enclosure for low-voltage switchgear and controlgear assemblies
Trade name	:	Schneider Electric
Type/Model	:	Thalassa PLM

Arnhem, 1 April 2015

Manufacturer:	Schneider Electric España, S.A. C/Llobregat, 9-11 08750 Molins de Rei-Barcelona Spain	
Production sites:	Schneider Electric España, S.A. C/Llobregat, 9-11 08750 Molins de Rei-Barcelona Spain (polyester products)	Besser Hungária KFT Váci út 81 IV EM 1056 Budapest Hungary (ABS/PC products)

Subject	:	Type tests
Requirements	:	IEC 62208:2011 (ed. 2.0) Clauses 9.3, 9.4, 9.6, 9.7, 9.8, 9.9, 9.10, 9.12, 9.13 and 9.14
Conclusion	:	The product complies with the specified requirements
Tested by	:	R. Verhagen
Checked by	:	H.G.M. Kormelink

© DEKRA Certification B.V. All rights reserved

Products may only be provided with a quality mark or put on the market as approved if DEKRA Certification B.V. has explicitly granted the right to carry a quality mark.

DEKRA Certification B.V. and/or its subsidiaries are not liable for any direct or indirect, incidental or consequential loss originating through or because of the use of the information or data from this document or due to the impossibility of using that information or data.

The contents of this report may not be made available to a third party other than as an entity provided with the aforementioned designations with respect to copyrights and liability.

DEKRA Certification B.V. Meander 1051, 6825 MJ Arnhem P.O. Box 5185, 6802 ED Arnhem, The Netherlands
T +31 88 96 83000 F +31 88 96 83100 www.dekra-certification.com Company registration 09085396

Table of contents

1 Subject 3
2 Tested characteristics 3
3 Object identification 4
4 Summary of type tests 5
5 General Items 5
6 Type tests 8
6.1 Marking 8
6.2 Static loads 8
6.3 Axial loads of metal inserts 8
6.4 Degree of protection against external mechanical impacts (IK code) 9
6.5 Degree of protection of assembly 10
6.5.1 Tests for the first numeral 6 10
6.5.2 Test for the second numeral 6 10
6.6 Properties of insulating materials 11
6.6.1 Thermal stability 11
6.6.2 Resistance to normal heat 11
6.6.3 Resistance to abnormal heat and fire 11
6.7 Dielectric strength 12
6.8 Resistance to ultra-violet (UV) radiation 13
6.9 Verification of resistance to corrosion 14
6.10 Thermal power dissipation capability 15
Appendix A Type test pictures 16
A.1 Photos of static loads test 16
A.2 Photos of axial loads of metal inserts test 18
A.3 Photos of mechanical impact (IK) test 19
A.4 Photos of degree of protection (IP) test 21
A.5 Photos of thermal stability test 24
A.6 Photos of resistance to abnormal heat and fire test 25
A.7 Photos of resistance to corrosion test 26
Appendix B Thermal power dissipation capability calculation 29
Appendix C Product information 30

1 Subject

Empty enclosure for low-voltage switchgear and controlgear assemblies

Product information

Trademark	: Schneider Electric
Type	: Thalassa PLM
Type of material	: ABS / PC (NSYPLM32G and NSYPLM32TG) Polyester reinforced with fibreglass (other models)
Method of fixing	: Wall mounting

2 Tested characteristics

Degree of protection	: IP66
Mechanical impact protection	: IK 10 (plain door and PC transparent door) IK 08 (glass door)
Resistance to corrosion	: indoor / outdoor
Resistance to ultra-violet (UV) radiation	: yes
Permissable loads	: 150 kg / m^2 (mounting plate) : 50 kg / m^2 (plain door)
Rated insulation voltage (U_i)	: 1000 Vac and 1500 Vdc

3 Object identification

The following types are available in the range:

External dimensions (mm)			References of wall-mounting enclosures with door							
Height	Width	Depth	Plain (3)	Transparent	Plain (3)	Transparent	Plain (3)	Transparent	Plain (1)	Transparent (1)
308	255	160	-	-	NSYPLM3025G	NSYPLM3025TG	-	-	-	-
310	215	160	NSYPLM32G	NSYPLM32TG	-	-	-	-	-	-
430	330	200	-	-	-	-	NSYPLM43G	NSYPLM43TG	NSYPLM43VG	NSYPLM43TVG
530	430	200	-	-	-	-	NSYPLM54G	NSYPLM54TG	NSYPLM54VG	NSYPLM54TVG
647	436	250	-	-	-	-	NSYPLM64G	NSYPLM64TG	NSYPLM64VG	NSYPLM64TVG
747	536	300	-	-	-	-	NSYPLM75G	NSYPLM75TG	NSYPLM75VG	NSYPLM75TVG
847	636	300	-	-	-	-	NSYPLM86G	NSYPLM86TG	NSYPLM86VG	NSYPLM86YVG
1056	852	350	-	-	-	-	NSYPLM108G (2)	NSYPLM108TG (2)	-	-

External dimensions (mm)			Wall-mounting enclosures with plain door and mounting plate (4)					
Height	Width	Depth	Plain	Bakelite	Plain	Bakelite	Plain	Bakelite
308	255	160	-	-	NSYPLM3025PG	NSYPLM3025BG	-	-
310	215	160	NSYPLM32PG	NSYPLM32BG	-	-	-	-
430	330	200	-	-	-	-	NSYPLM43PG	NSYPLM43BG
530	430	200	-	-	-	-	NSYPLM54PG	NSYPLM54BG
647	436	250	-	-	-	-	NSYPLM64PG	NSYPLM64BG
747	536	300	-	-	-	-	NSYPLM75PG	NSYPLM75BG
847	636	300	-	-	-	-	NSYPLM86PG	NSYPLM86BG
1056	852	350	-	-	-	-	-	NSYPLM108BG

Models listed in the table have grey color RAL7035 (as of 2015). Previously products were produced in grey color RAL7032 and have type references without the “G”. All tests were executed on products with grey color RAL7032. Type references given in the remainder of this test report refer to the old type references without the “G”.

The dimensions are stated in the drawings included in this report. For drawings see Appendix C.

For customised products the following rules apply:

- The height dimension shall not exceed the maximum size listed in the tables above.
- When an intermediate height (between two existing in the tables) is used to perform a customization, the locking system and the number of hinges / locks should be based on the largest of both. When a height less than the minimum height specified in the tables is used to perform a customisation, the locking system and their number of fixing points and hinges shall correspond to the smallest height in the tables above.
- The width dimension shall not exceed the maximum size listed in the tables above.
- The depth dimension shall not exceed the maximum size listed in the tables above.

4 Summary of type tests

Construction:

Clause 9.3	Marking
Clause 9.4	Static loads
Clause 9.6	Axial loads of metal inserts
Clause 9.7	Degree of protection against external mechanical impacts (IK code)
Clause 9.8	Degree of protection against access to hazardous parts and against ingress of solid objects and/or water (IP code)
Clause 9.9	Strength of materials and parts
- Clause 9.9.1	Thermal stability
- Clause 9.9.2	Resistance to heat
- Clause 9.9.3	Resistance to abnormal heat and fire
Clause 9.10	Dielectric strength
Clause 9.12	Resistance to ultra-violet (UV) radiation
Clause 9.13	Resistance to corrosion
Clause 9.14	Thermal power dissipation capability

5 General Items

Location of the tests

Resistance to UV radiation was performed at:

- AITEX laboratory in Plaza Emilio Sala, 1, E-03801 Alcoy-Alicante, Spain (UV exposure)
- AIMPLAS laboratory in Calle Gustave Eiffel, 4, 46980 Paterna-Valencia, Spain (flexural strength and charpy impact tests)

All other tests were performed at the laboratories of Schneider Electric, UE at locations:

- C/Call 64, 08786 Capellades-Barcelona, Spain
- C/Llobregat, 7-13, 08750 Molins de Rei-Barcelona, Spain

Tests were carried out by

Jose Antonio Baño	Schneider Electric, UE, Capellades-Barcelona, Spain
Marta Calveras	Schneider Electric, UE, Capellades-Barcelona, Spain
Francisco Alfaro	Schneider Electric, UE, Molins de Rei-Barcelona, Spain
Isabel Soriano	AITEX, Alcoy-Alicante, Spain
Maria Luisa Gil Rojo	AIMPLAS, Paterna-Valencia, Spain

The tests were supervised by

R. Verhagen	DEKRA Certification B.V., Arnhem, the Netherlands

General notes on tests

The tests were performed as per the sequence of tests described in chapter 9.2 of IEC 62208.

Subclause:	Test	Sample 1 Order	Sample 2 Order	Sample 3 Order	Representative sample
9.4	Static loads	1			
9.5	Lifting	2 / N/A			
9.6	Axial loads of metal inserts	3			
9.7	Degree of protection against external mechanical impacts (IK code)	4			
9.8	Degree of protection against access to hazardous parts and against ingress of solid objects and/or water (IP code)	5			
9.9.1	Thermal stability		1		
9.9.2	Resistance to heat		2		
9.9.3	Resistance to abnormal heat and fire		3		
9.10	Dielectric strength	6			
9.11	Continuity of the protective circuit	7 / N/A		3 / N/A	
9.12	Resistance to ultra-violet (UV) radiation				1
9.13	Resistance to corrosion			2	
9.14	Thermal power dissipation capability			1	
9.3	Marking	8			

Concerning sample 1 in the previous table the following samples were tested and considered as representative for the whole range:

- NSYPLM32: ABS + Polycarbonate. Plain door. Locking inside protected area
  Size: 310 x 215 x 160 mm. Note: One size is available for this type.
- NSYPLM32T: Polycarbonate transparent door and bottom of ABS + Polycarbonate. Locking inside protected area.
  Size: 310 x 215 x 160 mm. Note: One size is available for this type.
- NSYPLM3025T: Polyester. Glass door. Locking inside protected area
  Size: 308 x 255 x 160 mm.
  Test is considered to cover the NSYPLM3025 type with plain door.
- NSYPLM86B: Polyester. Plain door. Mounting plate of bakelite. Locking outside of protected zone of enclosure (2-point closure). Size: 847 x 636 x 300 mm.
  Test is considered to cover other NSYPLM.. types with smaller dimensions and plain door with 2-point locking system.
- NSYPLM86V: Polyester. Plain door. Locking inside of protected zone of enclosure (3-point closure). Size: 847 x 636 x 300 mm.
  Test is considered to cover the 3-point locking system of all the NSYPLM…V and NSYPLM…TV types.

On this sample only the IK, IP test and dielectric test is performed to cover the 3-point locking system. All other test clauses are covered by the tests on the other samples.

- NSYPLM108T and NSYPLM108P: Polyester. Glass door. Locking outside of protected zone of enclosure (4-point closure) + Metallic mounting plate. Size: 1056 x 852 x 350 mm.
  Test is considered to cover the 4-point locking system, the NSYPLM…P types and the glass door of all NSYPLM…T and NSYPLM…TV types.

Note 1: Clause 9.6 is not applicable for types NSYPLM32, NSYPLM32T and NSYPLM3025T because these products do not contain metal inserts.
Note 2: Tests were conducted in combination with wall fixing lugs: NSYPFPLM32G, NSYPFPLMG, NSYPFXPLM and mounting plates: NSYMR..., NSYMM..., NSYMF..., NSYMB…, NSYMPP…

6 Type tests

6.1 Marking

The verification of the marking is done in conformity with IEC 62208, clause 9.3.

The marking was rubbed by hand for 15 s with a piece of cloth soaked in water and then for 15 s with a piece of cloth soaked with petroleum spirit.

After the test the marking was legible to normal or corrected vision without additional magnification.

Result: Pass

6.2 Static loads

The verification of the static loads is done in conformity with IEC 62208, clause 9.4.

The static load test is done on the enclosure fitted with all its required components to support the maximum permissible load. The enclosure is tested as in normal use. The enclosure is loaded with a weight of 1,25 times the maximum load as specified by the manufacturer.

The following loads were applied:

Enclosure	Max. permissible load [kg/m^2]	Required test load [kg]	Actual test load [kg]
NSYPLM32	50 (door) 150 (mounting plate)	4,17 (door) 12,5 (mounting plate)	5,09 (door) 15,15 (mounting plate)
NSYPLM32T	150 (mounting plate)	12,5 (mounting plate)	15,15 (mounting plate)
NSYPLM3025T	150 (mounting plate)	14,73 (mounting plate)	15,11 (mounting plate)
NSYPLM86B	50 (door) 150 (mounting plate)	33,67 (door) 101 (mounting plate)	35,35 (door) 101,3 (mounting plate)
NSYPLM108T	150 (mounting plate)	168,06 (mounting plate)	171 (mounting plate)

Table 1: Static loads

The loads are retained for 1 h in the closed position at 70 °C.

After this period, the closed door is opened five times through 90°, resting at least 1 min in the open position.

Pictures of the test can be found in Appendix A.1.

After the test, with the test loads in place, the enclosure shows no cracks or permanent distortions and during the test no deflections which could impair any of its characteristics.

Result: Pass

6.3 Axial loads of metal inserts

The verification of the axial loads of metal inserts is done in conformity with IEC 62208, clause 9.6.

The test was performed on threaded metal inserts that are provided to retain the mounting plate or switchgear and controlgear supports in place. The test was carried out by applying an axial load for 10 s to representative samples. All metal inserts of each sample were tested. The enclosure was resting on a supporting platform to allow the application of the load.

The following axial loads were applied:

Enclosure	Size of insert [M]	Test force [N]
NSYPLM86B	M8	500
NSYPLM108T	M8	500

Table 2: Axial loads

Pictures of the test can be found in Appendix A.2.

At the end of the test, the insert was still in its original position, there was no sign of movement. Also there were no cracks and splits in the material containing the insert.

Result: Pass

6.4 Degree of protection against external mechanical impacts (IK code)

The mechanical impact test is performed in conformity with IEC 62208 clause 9.7 and IEC 62262.

The test equipment consists of a test hammer as described in IEC 60068-2-75 suitable for the dimensions of the enclosure. The enclosure was placed on a rigid support as for normal use.

The following impacts were applied:

Enclosure	IK rating	Impact [J]	Weight [kg]	Height [mm]
NSYPLM32	IK 10	20	5	400
NSYPLM32T	IK 10	20	5	400
NSYPLM3025T (glass door)	IK 08	5	1,7	300
NSYPLM3025T (other surfaces)	IK 10	20	5	400
NSYPLM86B	IK 10	20	5	400
NSYPLM86V	IK 10	20	5	400
NSYPLM108P	IK 10	20	5	400
NSYPLM108T (glass door)	IK 08	5	1,7	300

Table 3: Mechanical impacts

Three impacts were applied on each exposed surface in normal use (largest dimension is not above 1 m). The impacts were applied with even distribution over the faces of the enclosure. The test was not applied to the enclosure components (e.g. locks, hinges, etc.) and the backside surface of the enclosure.

Pictures of the test can be found in Appendix A.3.

After the test, the enclosure continued to provide the IP code and dielectric strength. It is possible to remove and reinstall removable covers and to open and close doors.

Result: Pass

6.5 Degree of protection of assembly

The verification of the degree of protection is done in conformity with IEC 62208, clause 9.8.

The tests were made according to IEC 60529. The degree of protection is given below:

Enclosure	IP code
NSYPLM32	IP66
NSYPLM32T	IP66
NSYPLM3025T	IP66
NSYPLM86B	IP66
NSYPLM86V	IP66
NSYPLM108T	IP66

Table 4: Degree of protection

Pictures of the test can be found in Appendix A.4.

6.5.1 Tests for the first numeral 6

Protection against access to hazardous parts.
This test was done with a straight rigid steel wire with a diameter of 1 mm and a length of 100 mm. The access probe was pushed against any openings of the enclosure with a test force of 1 N ± 10%.

The wire did not enter the enclosure and adequate clearance to hazardous parts was kept.

Result: Pass

Protection against solid foreign objects.
The test was made using a dust chamber incorporating the basic principles shown in figure 2 of IEC 60529 in which talcum powder was maintained in suspension. The talcum powder used is able to pass through a square-meshed sieve with a nominal wire diameter of 50 μm and a nominal width of a gap between wires of 75 μm.
The enclosure under test was supported inside the test chamber and the pressure inside the enclosure was maintained below the surrounding atmospheric pressure by a vacuum pump. The suction connection was made to a hole specially provided for this test. This hole was in the vicinity of the vulnerable parts. The depression did not exceed 2 kPa (20 mbar) on the manometer. The duration of the test was 8 hours.

After the test there was no dust found inside the enclosure.

Result: Pass

6.5.2 Test for the second numeral 6

Protection against powerful water jets
The test was made using a test nozzle according to fig. 6 of IEC 60529 with an internal diameter of 12,5 mm. The enclosure was sprayed from all practicable directions with a rate of water flow of 100 l/min ± 5%. The distance from nozzle to the enclosure surface was between 2,5 and 3 meters. The duration of the test was 3 minutes.

After the test there was no water found inside the enclosure.

Result: Pass

6.6 Properties of insulating materials

6.6.1 Thermal stability

The verification of thermal stability of enclosures is done in conformity with IEC 62208, clause 9.9.1.

The dry heat test was done on representative samples of the enclosure made of insulating materials, in line with IEC 60068-2-2 Test Bb, at a temperature of 70 °C, with natural air circulation, for a duration of 168 h and with a recovery of 96 h.

The material types are listed in Table 6. Pictures of the tested materials can be found in Appendix A.5.

The samples showed no crack visible to normal or corrected vision without additional magnification nor has the material become sticky or greasy.

Result: Pass

6.6.2 Resistance to normal heat

The verification of resistance of insulating materials to normal heat is done in conformity with IEC 62208, clause 9.9.2.

The suitability of the insulating materials to resist effects of heat was verified by reference to the insulation temperature index specified by the material supplier.

Insulating material	Insulation temperature index
1. SMC (Supplier MENZOLIT)	Continuous Service Temperature: 150 °C
2. SMC (Supplier IDI)	Temperature of deflection under load > 200 °C
3. SMC (Supplier ASTAR)	Heat distortion temperature > 200 °C
4. PA6 + 15% GF (Polyamide 6 + 15% Glass Fiber)	Heat Deflection Temperature at 0,45 Mpa: 210 °C
5. PA6 + 30% GF (Polyamide 6 + 30% Glass Fiber)	Heat Deflection Temperature at 0,45 Mpa: 215 °C
6. PA6.6 + 30% GF (Polyamide 6.6 + 30% Glass Fiber)	Heat Deflection Temperature at 0,4 N: 250 °C
7. PA6 (Polyamide 6)	Heat Deflection Temperature at 0,46 Mpa: 190 °C
8. PA6.6 (Polyamide 6.6)	Heat Deflection Temperature at 1,8 Mpa: 105 °C
9. PC (Polycarbonate)	Heat Deflection Temperature at 0,45 Mpa: 136 °C
10. Blend PC+ABS	Vicat softening temperature at 9,8 N: 115-120 °C
14. Neoprene	Maximum service temperature: 90 °C
15. Vulcanized Fiber	Thermal class: A (105 °C)
16. Adhesive Silicone Monocomponent	Maximum service temperature: 150 °C
19. Pur Gasket (Polyol + Isocyanate) Fermapor K31 (Sonderhoff)	Maximum service temperature: 80 °C
20. Polypropylene	Heat Deflection Temperature at 0,45 Mpa: 85 °C
28. Bakelite	Thermal class: 120 °C

Table 5: Insulation temperature index

Result: Pass

6.6.3 Resistance to abnormal heat and fire

The verification of the resistance of insulating materials to abnormal heat and fire is done in conformity with IEC 62208, clause 9.9.3.

The glow-wire test was done on all insulating materials, in line with IEC 60695-2-10 and IEC 60695-2-11. Insulating materials retaining current-carrying parts in position shall be tested at a temperature of 960 °C. Parts intended to be installed in hollow walls shall be tested at 850 °C. Other insulating materials shall be tested at a temperature of 650 °C. The minimum requirement for all materials is 650 °C. Some materials were tested at a higher temperature on request from the manufacturer. The duration of the tests was each time 30 seconds. The tip of the glow-wire was both times applied at a place where the section is thinnest and not less than 15 mm from the upper edge of the specimen. See Table 6 for the tested materials and their test results.

Insulating material	Glow wire	Remark
1. SMC (Supplier MENZOLIT)	960 °C*	Flames and glowing extinguish in 3 s after removal of the glow-wire
2. SMC (Supplier IDI)	960 °C*	Flames and glowing extinguish in 3 s after removal of the glow-wire
3. SMC (Supplier ASTAR)	960 °C*	Flames and glowing extinguish in 3 s after removal of the glow-wire
4. PA6 + 15% GF (Polyamide 6 + 15% Glass Fiber)	650 °C	No visible flame and sustained glowing
5. PA6 + 30% GF (Polyamide 6 + 30% Glass Fiber)	650 °C	No visible flame and sustained glowing
6. PA6.6 + 30% GF (Polyamide 6.6 + 30% Glass Fiber)	650 °C	No visible flame and sustained glowing
7. PA6 (Polyamide 6)	650 °C	No visible flame and sustained glowing
8. PA6.6 (Polyamide 6.6)	650 °C	No visible flame and sustained glowing
9. PC (Polycarbonate)	960 °C*	Flames and glowing extinguish in 8 s after removal of the glow-wire
10. Blend PC+ABS	960 °C*	No visible flame and sustained glowing
14. Neoprene	960 °C*	No visible flame and sustained glowing
19. Pur Gasket (Polyol + Isocyanate) Fermapor K31 (Sonderhoff)	650 °C	No visible flame and sustained glowing
20. Polypropylene	750 °C*	No visible flame and sustained glowing
28. Bakelite	960 °C*	Flames and glowing extinguish in 3 s after removal of the glow-wire

Table 6: Glow wire test results

* Tested at higher temperature on request from the manufacturer.

Pictures of the glow-wire test are given in Appendix A.6. Pictures of the tested materials can be found in Appendix A.5.

All materials comply with the requirements.

Result: Pass

6.7 Dielectric strength

The verification of the dielectric strength is done in conformity with IEC 62208, clause 9.10.

The test is applied to enclosures where insulating material are used. The test was performed for a rated insulation voltage (U_i) of 1000 Vac and 1500 Vdc.
The required test voltage is 1,5 x 2200 Vac for Ui 1000 Vac and 1,5 x 3820 Vdc for Ui 1500 Vdc. To cover both ratings a test voltage of at least 5730 Vac was applied.

The enclosure was preconditioned by placing it in a humidity cabinet containing air with relative humidity between 91 % and 95 % and a temperature of 40 ± 2 °C. The enclosure was kept in the cabinet for two days (48 h).

An r.m.s. voltage of substantially sine-wave form at a value according to 10.9.4 of IEC 61439-1:2011 was applied for 1 min between two metal foils, one in contact with the external surface and the other inside the enclosure at the limit of the protected space.

Further, all internal metallic parts are connected to a bar, and an r.m.s. voltage of substantially sine-wave form at a value according to 10.9.4 of IEC 61439-1:2011 is applied for 1 min between a metal foil in contact with the external surface and the bar.

Metal foils were especially applied:

- at locations where the door edges are closing on the enclosure body
- at seals between enclosure sections
- at seals between the door frame and glass plates
- at metal insert locations
- at mechanical impact locations

Enclosure	Test voltage [Vac]
NSYPLM32	6111
NSYPLM32T	5830
NSYPLM3025T	6170
NSYPLM86B	6140
NSYPLM86V	6020
NSYPLM108P	6200
NSYPLM108T	6030

Table 7: Dielectric strength test

The enclosure showed no damage impairing its further use. No breakdown or flash-over occurred during the test.

Result: Pass

6.8 Resistance to ultra-violet (UV) radiation

The verification of the resistance to ultra-violet (UV) radiation is done in conformity with IEC 62208, clause 9.12.

16 samples of each insulating material were subjected to the test. The dimensions of the samples are 80 x 10 mm with thicknesses in the range of 2 to 4,5 mm (depending on the material). The UV test was performed according to ISO 4892-2 method A, cycle 1 with a total test period of 500 hours.

After the UV exposure 6 samples were subjected to the flexural strength test according ISO 178:2010. The surface of the sample exposed to UV was turned face down and the pressure was applied to the non-exposed surface. As reference material 6 new unexposed samples were also subjected to the flexural strength test. Verification of flexural strength (according to ISO 178) shall have 70 % minimum retention meaning the flexural strength of the exposed samples shall be at least 70 % of the flexural strength of the new samples. The width and thickness of each sample was measured and used to calculate the flexural strength in MPa.

After the UV exposure 10 samples were subjected to the charpy impact test according ISO 179-1:2010. The impacts were applied to the exposed surface side of the sample. As reference material 10 new unexposed samples were also subjected to the charpy impact test. Verification of charpy impact (according to ISO 179) shall have 70 % minimum retention meaning the absorbed energy of the exposed samples shall be at least 70 % of the energy absorbed by the new samples. The width and thickness of each sample was measured and used to calculate the impact resistance in kJ/m^2.

The test results are summarized in the table below. All listed values are the average of all samples and the uncertainty (k=2) is given:

Material	Conditioning	Charpy impact resistance [kJ/m^2]	Flexural modulus [Mpa]	Flexural strength [Mpa]	Deflection at flexural strength [mm]
1. Polyamide 6 + 30% Glass Fiber (thickness 4,3 mm)	unexposed	52 ±3	5930 ±370	182 ±9	9.6 ±1,3
	exposed	47 ±4	5510 ±690	174 ±13	10 ±2
2. Polyamide 6 + 15% Glass Fiber (thickness 4,3 mm)	unexposed	47 ±3	3520 ±140	134 ±5	12 ±1
	exposed	47 ±3	3270 ±210	129 ±6	13 ±1
5. SMC (supplier IDI) (thickness 4,5 mm)	unexposed	39 ±12	10500 ±890	103 ±33	3,1 ±0,6
	exposed	34 ±5	10500 ±1500	104 ±46	2,9 ±1
6. SMC (supplier MENZOLIT) (thickness 4,3 mm)	unexposed	27 ±4	11800 ±380	90,4 ±14	4,3 ±0,4
	exposed	27 ±6	9020 ±490	68,1 ±12	2,4 ±0,5
8. Polycarbonate (thickness 3,4 mm)	unexposed	NB	2380 ±41	95,4 ±1,9	9,9 ±0,1
	exposed	61 ±11*	2280 ±54	98,8 ±1,9	9,0 ±0,4
9. Blend PC+ABS (thickness 4,2 mm)	unexposed	NB	2510 ±39	89,7 ±1,9	11 ±1
	exposed	NB	2500 ±70	94,8 ±2,4	10 ±1

NB = did not break
* Charpy impact resistance cannot be compared to the new condition. 5 out of 10 samples did not break. The average value in kJ/m^2 is higher than all other materials tested.

Table 8: Resistance to ultra-violet (UV) radiation test

All materials comply with the requirements.

Result: Pass

6.9 Verification of resistance to corrosion

The verification of the resistance to corrosion of the internal metallic parts is done in conformity with IEC 62208, clause 9.13.2.1, severity test A.

The test consists of:

- 6 cycles of 24 h each to damp heat cycling test according to IEC 60068-2-30 (Test Db) at (40 ± 3) °C and relative humidity of 95% and
- 2 cycles of 24 h each to salt mist test according to IEC 60068-2-11 (Test Ka: salt mist), at a temperature of (35 ± 2) °C

The verification of the resistance to corrosion of a representative enclosure and the external metallic parts separately is done in conformity with IEC 62208, clause 9.13.2.2, severity test B.

The test consists of two identical 12 day periods each comprising:

- 5 cycles of 24 h each to damp heat cycling test according to IEC 60068-2-30 (Test Db) at (40 ± 3) °C and relative humidity of 95% and
- 7 cycles of 24 h each to salt mist test according to IEC 60068-2-11 (Test Ka: salt mist), at a temperature of (35 ± 2) °C

Pictures of the tested materials can be found in Appendix A.7.

All materials comply with the following requirements:

- there is no evidence of iron oxide, cracking or other deterioration more than that allowed by ISO 4628-3 for a degree of rusting Ri1
- the mechanical integrity is not impaired
- seals are not damaged
- doors, hinges, locks, and fastenings work without abnormal effort

Result: Pass

6.10 Thermal power dissipation capability

The verification of the thermal power dissipation capability is done in conformity with IEC 62208, clause 9.14.

The thermal power dissipation data provided by the manufacturer is determined by a calculation method according to IEC/TR 60890 and are verified by DEKRA.

The maximum allowed temperature-rise of air at internal top of the enclosure is considered 45 K for this calculation. This corresponds to an absolute internal temperature of 80 °C for 35 °C ambient temperature. The allowed effective power losses of equipment installed inside the enclosure are calculated for all combinations of the following:

- Each enclosure size available within the range
- Different types of installation relevant for the enclosure

The calculations in this test report are valid if the following conditions in the practical application of the enclosures are fulfilled (refer to chapter 4 of IEC/TR 60890):

- There is an approximately even distribution of power losses inside the enclosure.
- The installed equipment is so arranged that air circulation is but little impeded.
- The equipment installed is designed for direct current or alternating current up to and including 60 Hz with the total supply currents not exceeding 3150 A.
- Conductors carrying high currents and structural parts are so arranged that eddy-current losses are negligible.
- There are no horizontal partitions in the enclosure.

The calculation results are provided in Appendix B.

Result: Pass

Appendix A Type test pictures

A.1 Photos of static loads test

Photo 1: NSYPLM32

Photo 2: NSYPLM32T

Photo 3: NSYPLM3025T

Photo 4: NSYPLM86B

Photo 5: NSYPLM108T

A.2 Photos of axial loads of metal inserts test

Photo 6: NSYPLM86B

Photo 7: NSYPLM108T

A.3 Photos of mechanical impact (IK) test

Photo 8: NSYPLM32

Photo 9: NSYPLM32T

Photo 10: NSYPLM3025T

Photo 11: NSYPLM86B

Photo 12: NSYPLM108T

Photo 13: NSYPLM108P

Photo 14: NSYPLM86V

A.4 Photos of degree of protection (IP) test

Photo 15: IP6X test NSYPLM32

Photo 16: IPX6 test NSYPLM32

Photo 17: IP6X test NSYPLM32T

Photo 18: IPX6 test NSYPLM32T

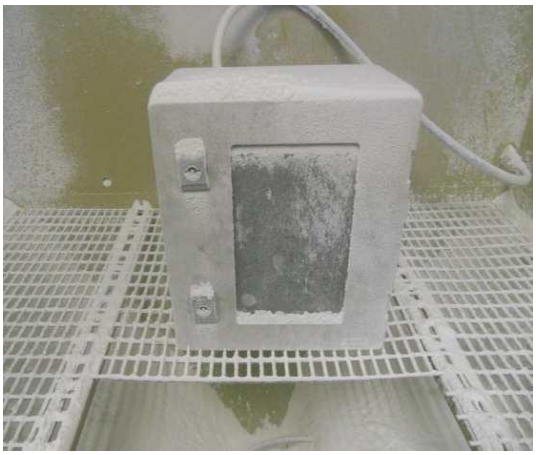

Photo 19: IP6X test NSYPLM3025T

Photo 20: IPX6 test NSYPLM3025T

Photo 21: IP6X test NSYPLM86B

Photo 22: IPX6 test NSYPLM86B

Photo 23: IP6X test NSYPLM108T

Photo 24: IPX6 test NSYPLM108T

Photo 25: IP6X test NSYPLM86V

Photo 26: IPX6 test NSYPLM86V

A.5 Photos of thermal stability test

Photo 27: Insulating materials (1)

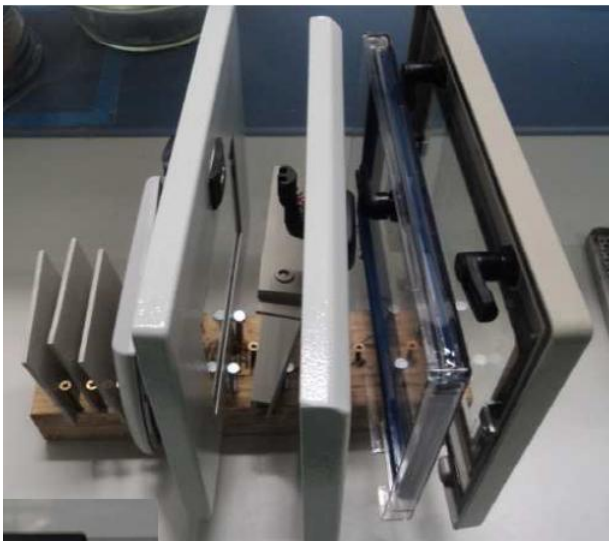

Photo 28: Insulating materials (2)

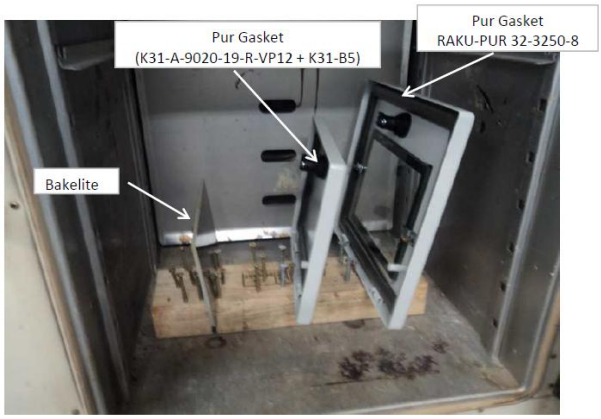

Photo 29: Insulating materials (3)

A.6 Photos of resistance to abnormal heat and fire test

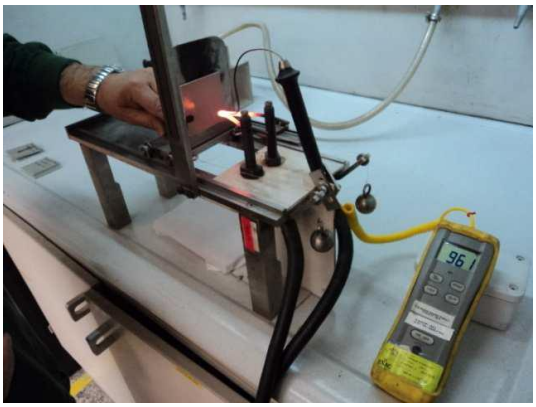

Photo 30: Glow-wire test setup (1)

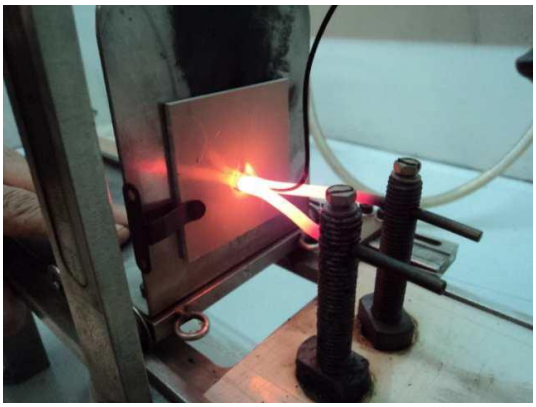

Photo 31: Glow-wire test setup (2)

A.7 Photos of resistance to corrosion test

Photo 32: Lock with 4 point closure system (1) (NSYPLM108) (severity B)

Photo 33: Lock with 4 point closure system (2) (NSYPLM108) (severity B)

Photo 34: Lock with double-bar insert (Other models) (severity B)

Photo 35: Guide piece of lock system (NSYPLM108) (severity B)

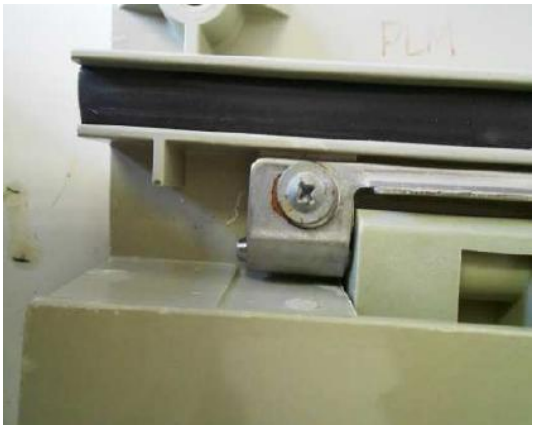

Photo 36: Hinge (NSYPLM108) (severity B)

Photo 37: Screw fixing back the hinges (NSYPLM108) (severity B)

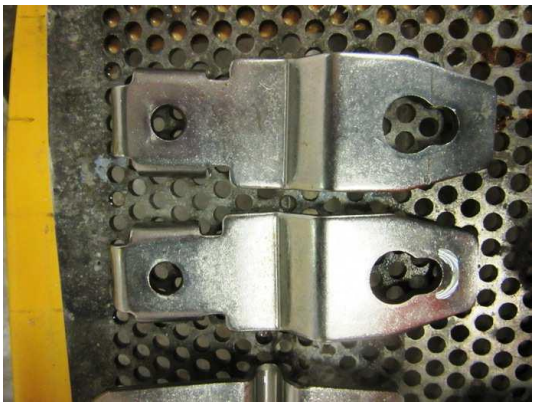

Photo 38: Wall mounting fixing NSYPFXPLM (severity B)

Photo 39: Internal metallic parts PLM (1) (severity A)

Photo 40: Internal metallic parts PLM (2) (severity A)

Photo 41: Mounting plate NSYMM… / NSYPMM… (severity A)

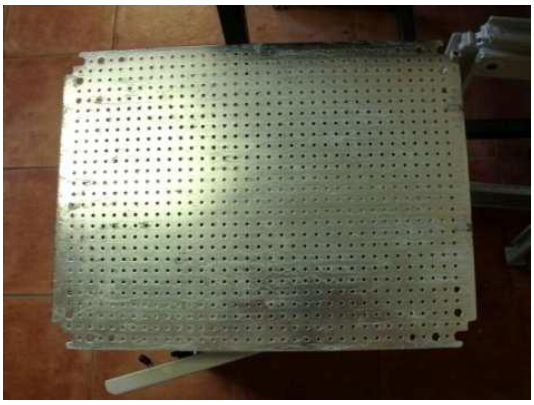

Photo 42: Mounting plate NSYMF… / NSYPMF… (severity A)

Photo 43: Mounting plate NSYMR… / NSYPMR… (severity A)

Appendix B Thermal power dissipation capability calculation

Power Dissipation (External Temperature = 35ºC)								THALASSA PLM Series																	
REFERENCES								DIMENSIONS (in m.) HxWxD																	
NSYPLM... (RAL 7032)	NSYPLM...G (RAL 7035)	NSYPLM...T (RAL 7032)	NSYPLM...TG (RAL 7035)	NSYPLM...VG (RAL 7035)	NSYPLM...TVG (RAL 7035)	NSYPLM...PG (RAL 7035)	NSYPLM...BG (RAL 7035)	H	W	D	Pd (W)	m^2	Pd (W)	m^2	Pd (W)	m^2	Pd (W)	m^2	Pd (W)	m^2	Pd (W)	m^2	Pd (W)	m^2
NSYPLM3025	NSYPLM3025G	NSYPLM3025T	NSYPLM3025TG	--	--	NSYPLM3025PG	NSYPLM3025BG	308	255	160	49	0,29	44	0,26	46	0,27	41	0,24	43	0,25	38	0,22	33	0,19
NSYPLM32	NSYPLM32G	NSYPLM32T	NSYPLM32TG	--	--	NSYPLM32PG	NSYPLM32BG	310	215	160	44	0,26	40	0,23	41	0,24	36	0,21	38	0,22	33	0,19	29	0,17
NSYPLM43	NSYPLM43G	NSYPLM43T	NSYPLM43TG	NSYPLM43VG	NSYPLM43TVG	NSYPLM43PG	NSYPLM43BG	430	330	200	83	0,50	74	0,45	77	0,47	69	0,41	72	0,43	63	0,38	56	0,33
NSYPLM54	NSYPLM54G	NSYPLM54T	NSYPLM54TG	NSYPLM54VG	NSYPLM54TVG	NSYPLM54PG	NSYPLM54BG	530	430	200	116	0,72	102	0,63	110	0,68	96	0,59	103	0,64	90	0,55	80	0,49
NSYPLM64	NSYPLM64G	NSYPLM64T	NSYPLM64TG	NSYPLM64VG	NSYPLM64TVG	NSYPLM64PG	NSYPLM64BG	647	436	250	148	0,95	131	0,84	138	0,89	122	0,77	129	0,82	112	0,71	101	0,63
NSYPLM75	NSYPLM75G	NSYPLM75T	NSYPLM75TG	NSYPLM75VG	NSYPLM75TVG	NSYPLM75PG	NSYPLM75BG	747	536	300	192	1,35	182	1,19	181	1,26	170	1,10	180	1,17	157	1,01	141	0,90
NSYPLM86	NSYPLM86G	NSYPLM86T	NSYPLM86TG	NSYPLM86VG	NSYPLM86TVG	NSYPLM86PG	NSYPLM86BG	847	636	300	239	1,69	216	1,48	228	1,59	206	1,38	218	1,49	191	1,28	176	1,14
NSYPLM108	NSYPLM108G	NSYPLM108T	NSYPLM108TG	--	--	--	NSYPLM108BG	1056	852	350	384	2,70	344	2,34	368	2,55	331	2,19	353	2,41	309	2,05	278	1,84

References from 2015 with the change color of grey RAL 7032 to grey RAL 7035, then added the letter "G" in the final of the current references

Appendix C Product information

Dimensions

Reference	DIMENSIONS (in mm.) HxWxD		
	H	W	D
NSYPLM3025...	308	255	160
NSYPLM32...	310	215	160
NSYPLM43...	430	330	200
NSYPLM54...	530	430	200
NSYPLM64...	647	436	250
NSYPLM75...	747	536	300
NSYPLM86...	847	636	300
NSYPLM108...	1056	852	350

General View

NSYPLM32... NSYPLM3025... NSYPLM43... - NSYPLM86... NSYPLM...V... NSYPLM108...

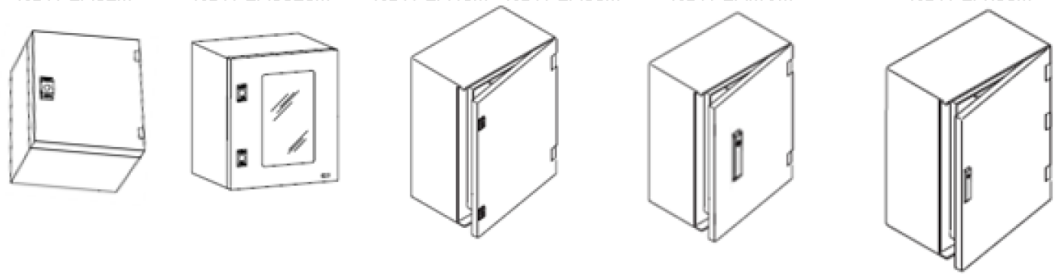

Fastening system

- Locking:

NSYPLM32... NSYPLM3025... NSYPLM43.... - NSYPLM86...

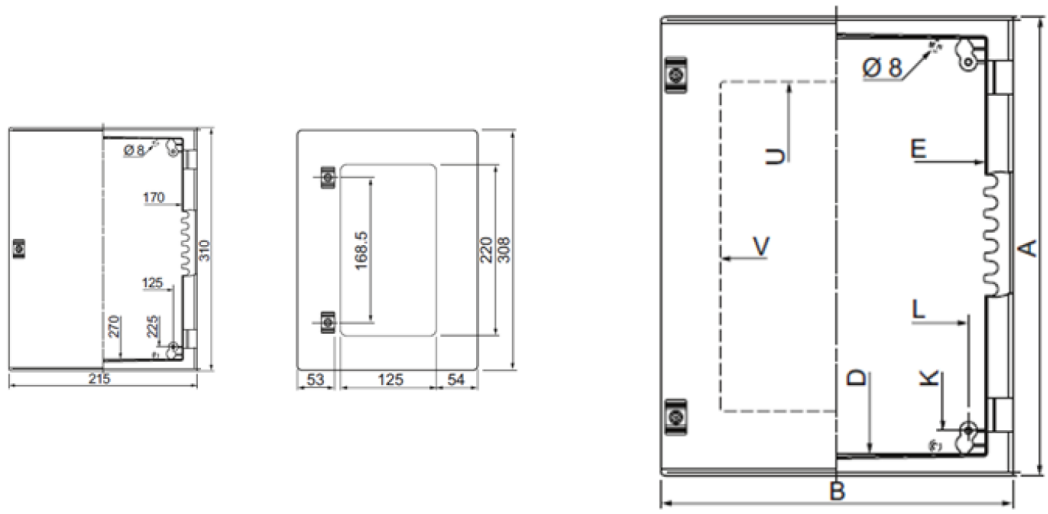

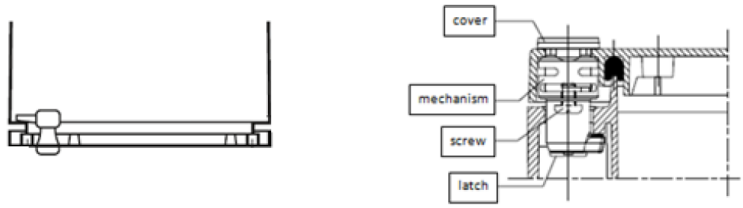

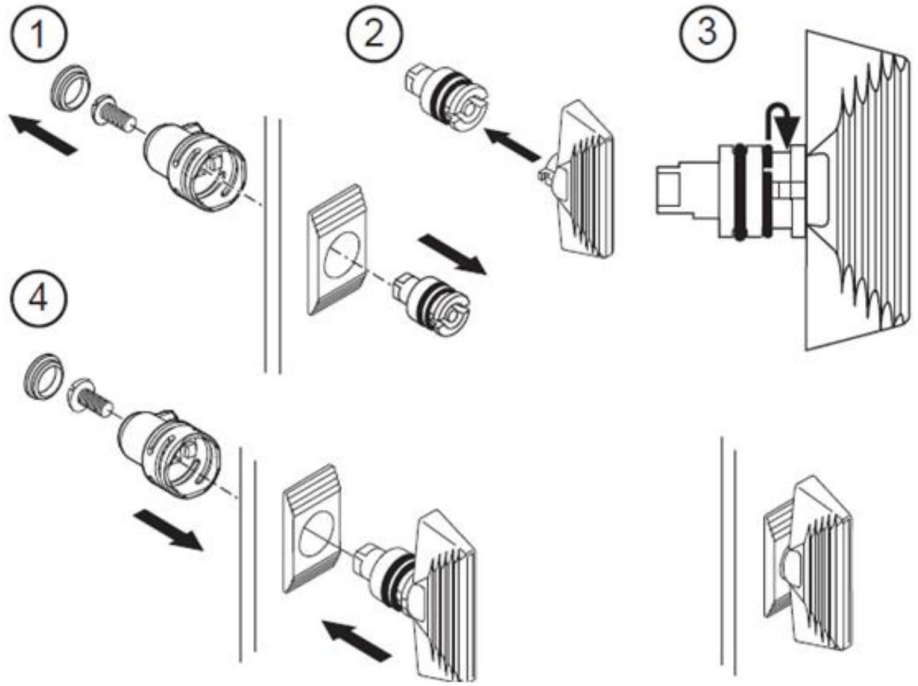

NSYPLM…V…:

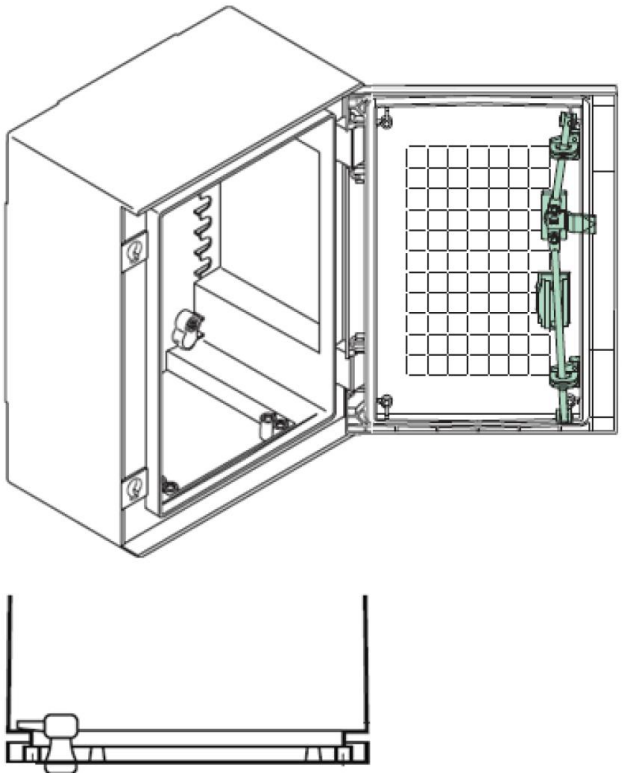

NSYPLM108...:

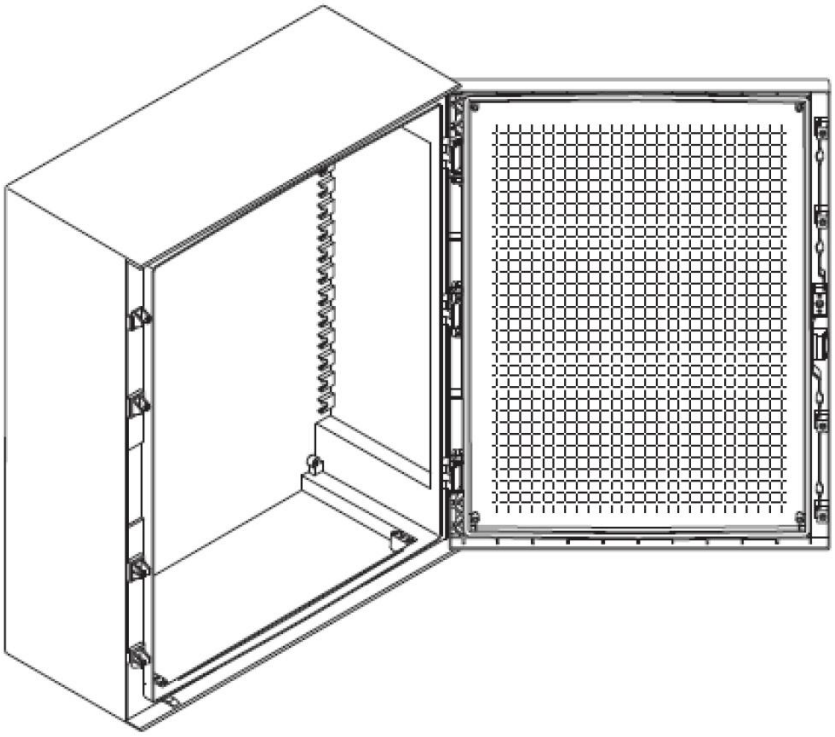

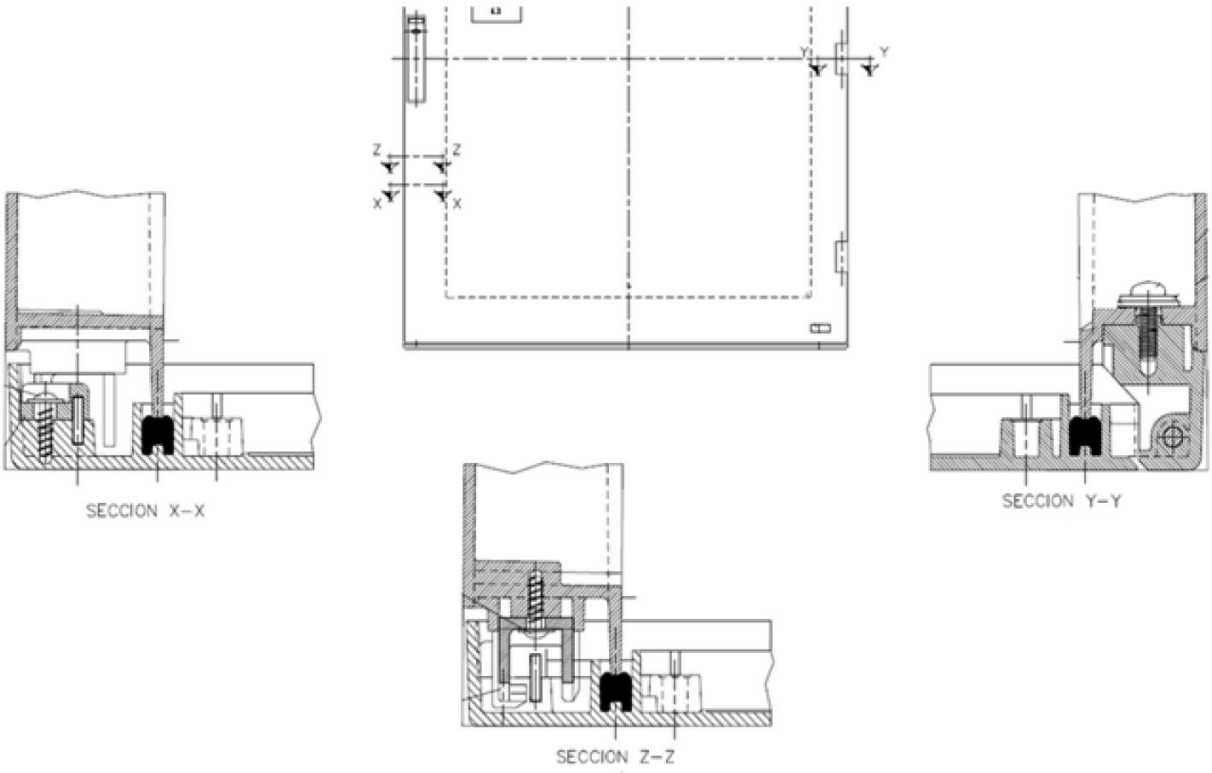

- Hinges

NSYPLM32…

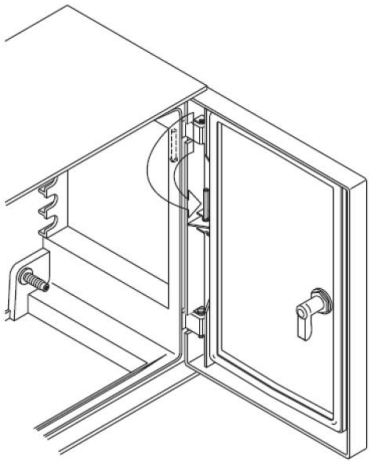

NSYPLM3025…

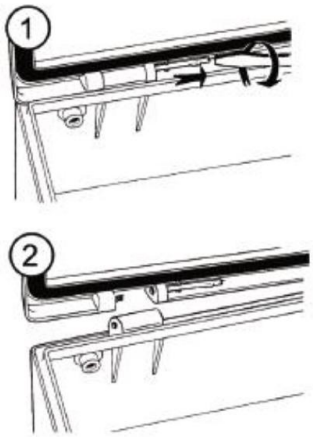

Others PLM…

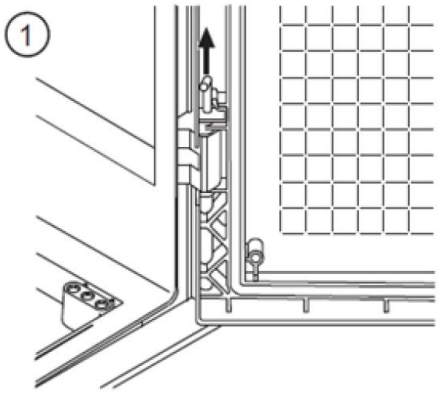

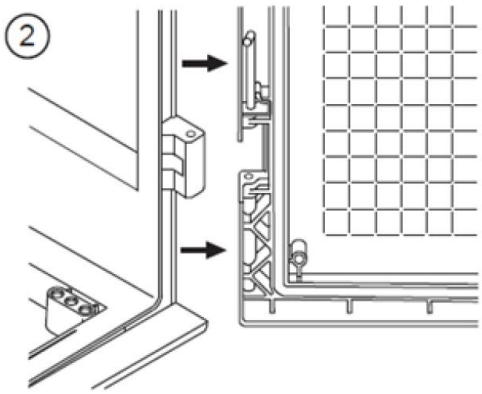

Mounting plate fixing system

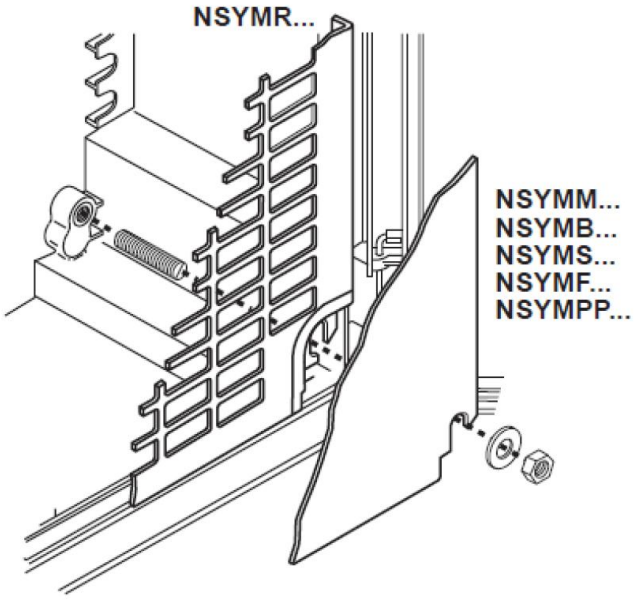

Plain	Silkscreened	Microperforated	Telequick	Polyester	Bakelite
NSYMM...	NSYMS...	NSYMF...	NSYMR...	NSYMPP...	NSYMB...

Wall-fixing lugs

NSYPLM32...:

NSYPFPLM32G: Polyamide

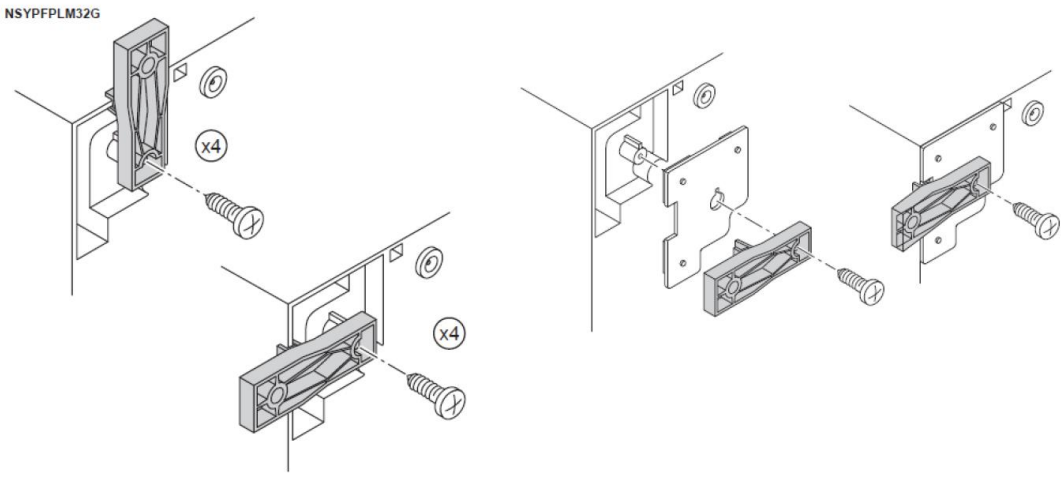

NSYPLM3025...:

NSYPFXPLM: Stainless steel

NSYPFPLMG: Polyamide

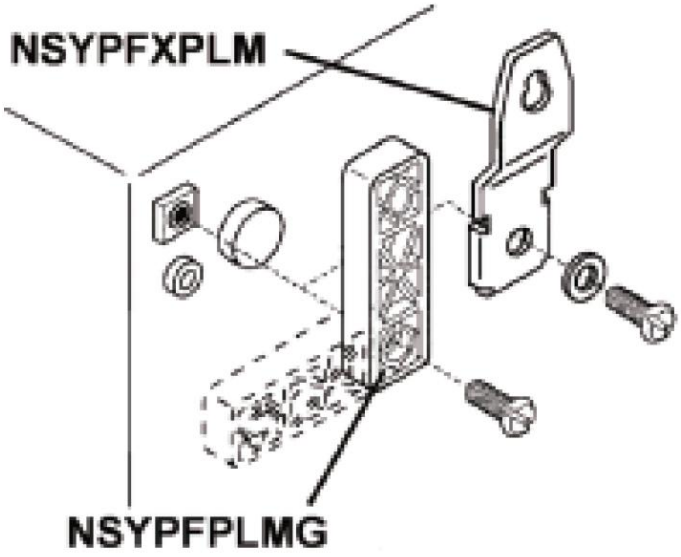

Others NSYPLM...:

NSYPFXPLM: Stainless steel
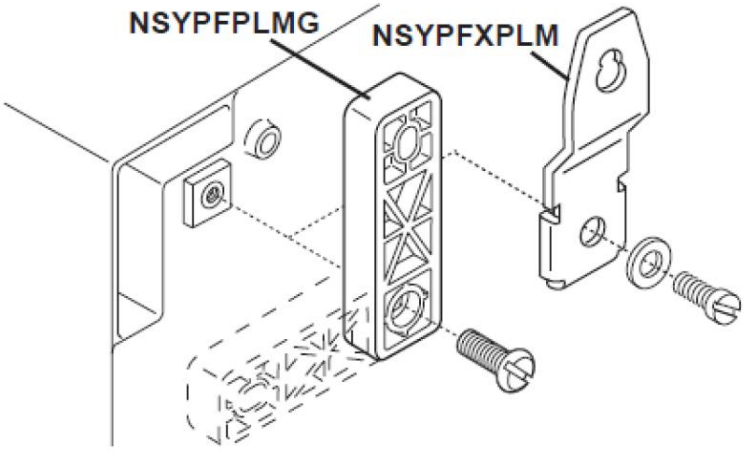
NSYPFPLMG: Polyamide