Product data sheet
Characteristics

HMISTW6600
12"W touch panel display, 2Ethernet, USB host&device, 24VDC

Main

Range of product	Harmony ST6 & STW6
Product or component type	Touch panel screen
Software designation	Web interface for operator
Processor name	ARM Cortex-A8

Complementary

Display size	12 inch
Display type	Colour TFT LCD
Display colour	16 million colours
Display resolution	1280 x 800 pixels WXGA
Touch panel	Single touch analogue resistive
Backlight lifespan	50000 hours white
Brightness	16 levels
Character font	ASCII ASCII (European characters) Katakana
[Us] rated supply voltage	24 V DC +/- 20 %
Inrush current	30 A
Local signalling	Status LED green, steady offline Status LED green, steady operating Status LED green, flashing operating Status LED green, faded stand-by Status LED orange, flashing software starting up Status LED red, steady power supply (ON) Status LED red, flashing operating Status LED red, off power supply (OFF)
Power consumption in W	18.4 W
Processor frequency	800 MHz
Port Ethernet	10/100BASE
Memory description	Device memory 512 MB Backup memory 512 MB User data memory 128 kB
Integrated connection type	1 USB 2.0 type Aback 1 USB 2.0 type micro Bback 2 Ethernet - female RJ45bottom
Supply	External supply
Realtime clock	Built-in 0...50 °C Built-in 10...90 % RH
Fixing mode	By 4 screws 1.6...5 mm thick panel UL 61010-2-201 By 4 screws EN 61131-2 By 4 screws IEC 61000-6-2
Enclosure material	PC
Front material	Aluminium
Marking	CE
Cut-out dimensions	295 x 217 mm panel cut dimension

The information provided in this documentation contains general descriptions and/or technical characteristics of the performance of the products contained herein.
This documentation is not intended as a substitute for and is not to be used for determining suitability or reliability of these products for specific user applications.
It is the duty of any such user or integrator to perform the appropriate and complete risk analysis, evaluation and testing of the products with respect to the relevant specific application or use thereof.
Neither Schneider Electric Industries SAS nor any of its affiliates or subsidiaries shall be responsible or liable for misuse of the information contained herein.

Maximum Height	9.25 in (235 mm)
Maximum Width	12.32 in (313 mm)
Maximum Depth	1.97 in (50 mm)
Net Weight	3.97 lb(US) (1.8 kg)

Environment

Immunity to microbreaks	10 ms
Standards	EN 61000-6-4 EN 61000-6-2 EN 61131-2 UL 61010-2-201 CSA C22.2 No 61010-2-201
Product certifications	CSA CE China RoHS REACH
Directives	2014/35/EU - low voltage directive 2014/30/EU - electromagnetic compatibility
Ambient air temperature for operation	32…122 °F (0…50 °C)
Ambient air temperature for storage	-4…140 °F (-20…60 °C)
Relative humidity	10…90 % non-condensing
Operating altitude	6561.68 ft (2000 m)
IP degree of protection	IP20 IEC 61131-2 rear panel) IP65 IEC 61131-2 front panel)
NEMA degree of protection	NEMA 4 front panel (indoor use) NEMA 13 front panel (in enclosure)
Shock resistance	147 m/s² 11 ms X, Y, Z directions for 3 times)EN/IEC 61131-2
Vibration resistance	+/- 3.5 mm 5…9 Hz)X, Y, Z directions for 10 cycles (approx. 100 min) EN/IEC 61131-2 9.8 m/s² 9…150 Hz)
Electromagnetic compatibility	Electrical fast transient/burst immunity test 2 kV power ports) IEC 61000-4-4 Electrical fast transient/burst immunity test 1 kV signal ports) Electrostatic discharge immunity test 6 kV contact discharge) EN/IEC 61000-4-2 level 3 Electrostatic discharge immunity test 8 kV air discharge)

Ordering and shipping details

Category	22569 - MAGELIS XBT-GT (AND XBT-G)
Discount Schedule	MC2
GTIN	03606489918101
Nbr. of units in pkg.	1
Package weight(Lbs)	6.61 lb(US) (3.00 kg)
Returnability	Yes
Country of origin	US

Offer Sustainability

Sustainable offer status	Green Premium product
EU RoHS Directive	Compliant EU RoHS Declaration
Mercury free	Yes
RoHS exemption information	Yes
China RoHS Regulation	China RoHS Declaration
Environmental Disclosure	Product Environmental Profile
Circularity Profile	End Of Life Information
WEEE	The product must be disposed on European Union markets following specific waste collection and never end up in rubbish bins.

Dimensions

External Dimensions

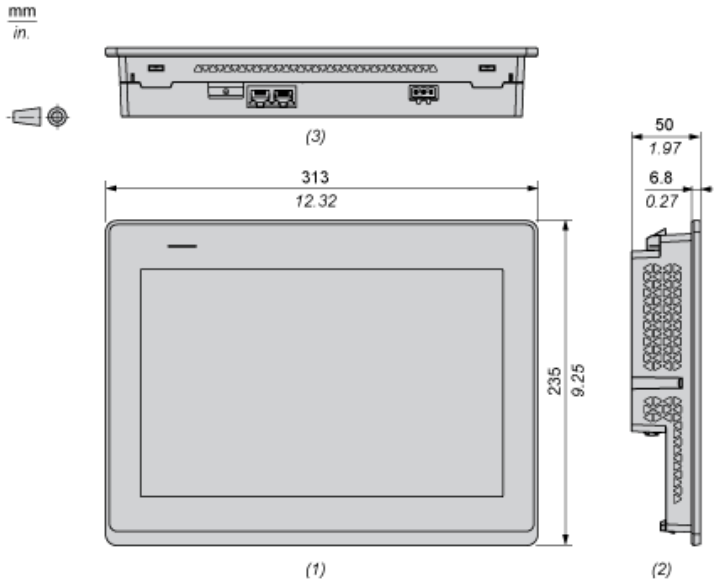

(1) : Front
(2) : Left
(3) : Bottom

Dimensions with Installation Fasteners

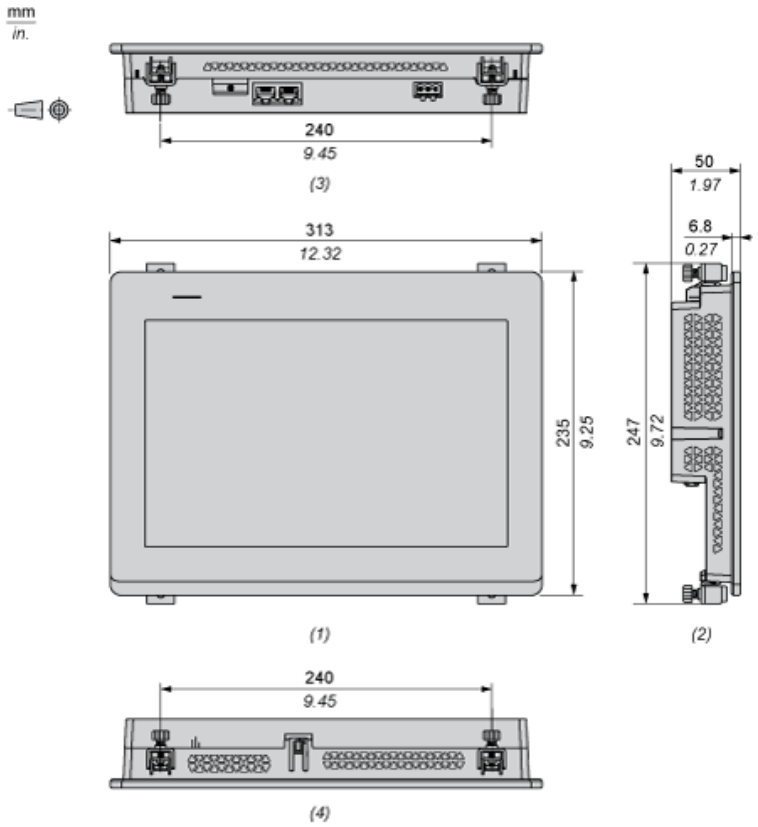

(1) : Front
(2) : Left
(3) : Bottom
(4) : Top

Dimensions with Cables

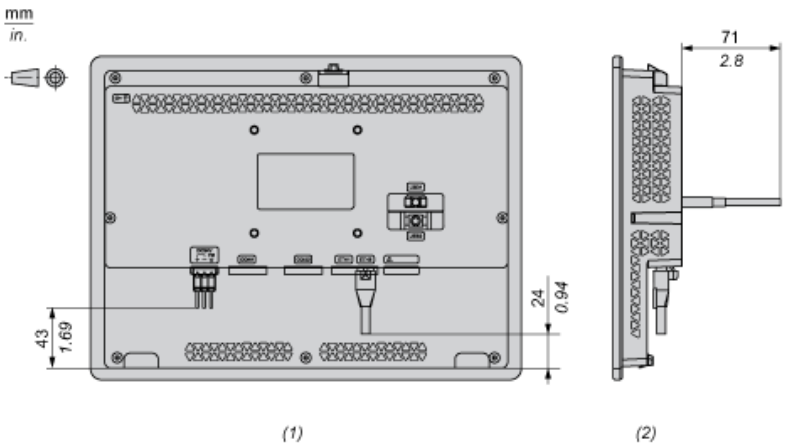

(1) : Rear
(2) : Right

Mounting

Panel Cut Dimensions

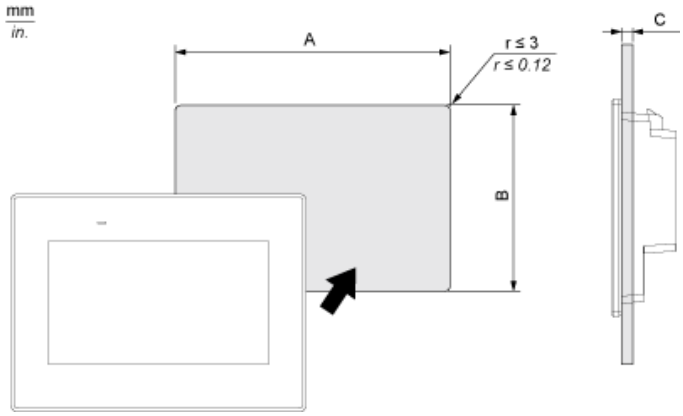

A		B		C	
mm	in.	mm	in.	mm	in.
295 (+1, -0)	11.61 (+0.04, -0)	217 (+1, -0)	8.54 (+0.04, -0)	1.6...5	0.06...0.2

Installation Requirements

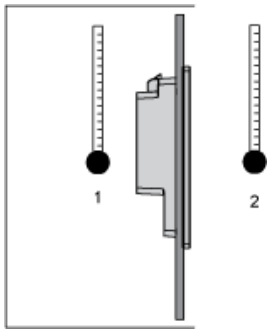

1 : Internal temperature
2 : External temperature

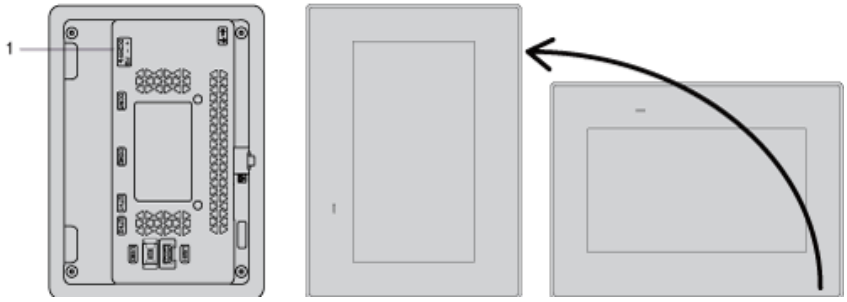

1 : Power connector

Mounting Angle

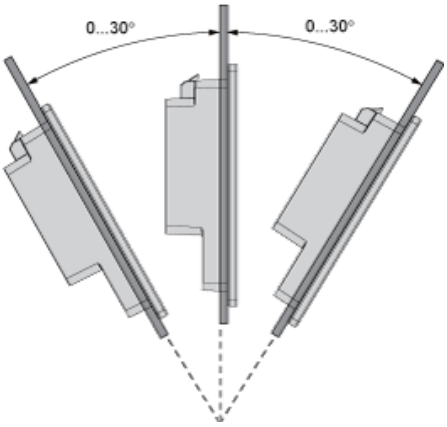
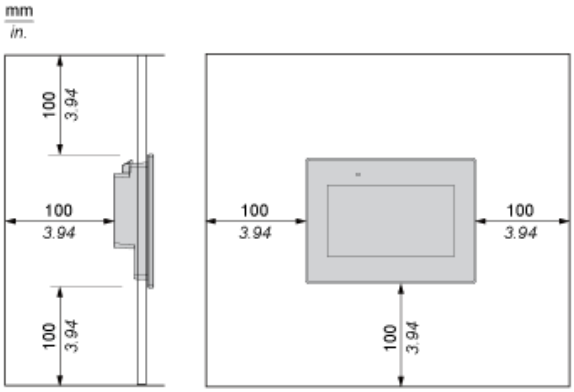
Clearance