ION7400 series
Technical Data Sheet

Providing high accuracy and a wide range of features for transmission and distribution metering, the versatile PowerLogic ION7400 series advanced utility meter has the flexibility to change along with your needs.

- Compact 3-phase, multifunction energy and power quality compliance
- Flexible and modular installation with object-oriented intelligence
- Accurate, precise, and highly adaptable metering

Applications

- Substation feeder metering
- Revenue metering
- Extensive power quality monitoring and cause analysis
- End feeder line monitoring
- Digital fault recording

PB115152

The solution for

Markets that can benefit from a solution that includes PowerLogic ION7400 series meters:

- Transmission networks
- Distribution network

Benefits

- Reduce operations costs
- Improve power quality
- Improve continuity of service

Competitive advantages

- Be able to use Power Monitoring Expert software for data analysis or share operation data with SCADA systems through multiple communication channels and protocols
- Transformer/line loss compensation
- Instrument transformer correction
- Utilize disturbance direction detection to help locate fault

Power management solutions

Schneider Electric provides innovative power management solutions to increase your energy efficiency and cost savings, maximise electrical network reliability and availability, and optimise electrical asset performance.

Conformity of standards

- ANSI C12.20
- CLC/TTR50579
- EN 50160
- IEC 61000-4-7
- IEC 61000-4-15
- IEC 61000-4-30
- IEC 61010-1
- IEC 61326
- IEC 61557-12
- IEC 61850
- IEC 62052-11
- IEC 62053-22
- IEC 62053-23
- IEC 62586
- IEEE 519

ION7400 series

PB115152

PowerLogic ION7400 meter showing active alarms.

PB115161

PowerLogic ION7400 meter - rear view.

PB115162_1

PowerLogic ION7403 DIN rail mounted meter.

Applications and benefits

- Maximize profits by providing the highest output possible with the least amount of risk to availability
- Optimize availability and reliability of electrical systems and equipment
- Monitor power quality (PQ) for compliance and to prevent problems
- Meters fully supported by EcoStruxure™ Power Monitoring Expert and EcoStruxure™ Power SCADA Operation software

Main characteristics

- Precision metering:
  - IEC 61557-12 PMD/Sx/K70/0.2 3000m (performance measuring and monitoring functions)
  - IEC 62053-22 for active energy Class 0.2s accuracy and 0.5s accuracy, ANSI C12.20 Class 0.2 for active energy
  - IEC 62053-23 for reactive energy Class 2 accuracy and Class 3
  - Cycle-by-cycle RMS measurements updated every ½ cycle
  - Full 'multi-utility' WAGES metering support
  - Net metering
  - Anti-tamper protection seals
  - Test mode
- PQ Compliance and basic PQ analysis.
  - Monitors and logs parameters in support of international PQ standards,
    - IEC 61000-4-30 Class S
    - IEC 61000-4-15 Flicker
    - IEC 62586
    - EN 50160
  - Generates onboard PQ compliance reports accessible via onboard web pages:
    - Basic event summary and pass/fail reports, such as EN 50160 for power
    - Frequency, supply voltage magnitude, supply voltage dips, short and long interruptions, temporary over voltages, voltage unbalance and harmonic voltage
    - ITIC (CBEMA) and SEMI curves, with alarm categorization to support further analyses
    - Basic meter provides EN 50160 but can be configured to provide IEEE 519
  - Harmonic analysis:
    - THD on voltage and current, per phase, min/max, custom alarming
    - Individual harmonic magnitudes and angles on voltage and current, up to the 63rd harmonic
  - High resolution waveform capture: triggered manually or by alarm, captured waveforms available directly from the meter via FTP in a COMTRADE format or can be viewed via onboard webpages
  - Disturbance detection and capture: sag/swell on any current and voltage channel, alarm on disturbance event, waveform capture with per-event information
  - Patented disturbance direction detection: provides indication of the captured disturbance occurring upstream or downstream of the meter; timestamped results provided in the event log, with degree of certainty of disturbance direction
- Used with EcoStruxure™ Power Monitoring Expert software, provides detailed PQ reporting across entire network:
  - EN 50160 report
  - IEC 61000-4-30 report
  - PQ compliance summary
  - Display of waveforms and PQ data from all connected meters.

ION7400 series

PB115153

PowerLogic ION7400 with Harmonics display.

PB117743

PowerLogic remote display.

PB113671

PowerLogic I/O module.

PB117739

PowerLogic ION7400 meter with remote display.

- Onboard data and event logging
  - 512 MB of standard non-volatile memory
  - No data gaps due to network outages or server downtime
  - Min/Max log for standard values
  - 50 user-definable data logs, recording up to 16 parameters on a cycle-by-cycle or other user definable interval
  - Continuous logging or 'snapshot' triggered by setpoint and stopped after defined duration
  - Trend energy, demand and other measured parameters
  - Forecasting via web pages: average, minimum and maximum for the next four hours and next four days
  - Time-of-use in conjunction with EcoStruxure™ software
  - Event log: alarm conditions, metering configuration changes, and power outages, timestamped to 1 millisecond
- Alarming and control.
  - 50+ definable alarms to log critical event data, trigger waveform recording, or perform control function
  - Trigger on any condition, with cycle-by-cycle and 1-second response time
  - Combine alarms using Boolean logic and to create alarm levels
  - Alarm notification via email text message
  - In conjunction with EcoStruxure™ Power Monitoring Expert, software alarms and alarm frequency are categorized and trended for easy evaluation of worsening/improving conditions
- Excellent quality: ISO 9001 and ISO 14000 certified manufacturing

Usability

- Easy installation and setup
  - Panel and DIN rail mounting options, remote display option
  - Pluggable connectors
  - Free setup application simplifies meter configuration
- Front panel
  - Easy to read colour graphic display
  - Simple, intuitive menu navigation with multi-language (8) support
  - Optical port
  - 2 energy pulsing LEDs
  - Alt/Norm screens.
- Flexible remote communications
  - Multiple simultaneously operating communication ports and protocols allow interfacing with other automation systems; (e.g. waveforms, alarms, billing data, etc.) can be uploaded for viewing/analysis while other systems access real-time information
  - Supports Modbus, ION, DNP3, IEC 61850
  - Dual port Ethernet: 10/100BASE-TX; daisy-chaining capability removes need for additional switches
  - Create redundant network loop using Rapid Spanning Tree Protocol (RSTP) and managed Ethernet switches
  - Customize TCP/IP port numbers enable/disable individual ports
  - RS-485 2-wire connection, up to 115200 baud, Modbus RTU and ION protocols, DNP3 is also supported via RS-485.

ION7400 series

PowerLogic ION7400 series meter with phasor display.

- Flexible remote communications (cont'd)
  - Ethernet to serial gateway with Modbus Master functionality, connecting to 31 downstream serial Modbus devices. Also supports Modbus Mastering over TCP/IP (Ethernet) network.
  - Full function web server with factory and customizable pages to access real-time and PQ compliance data.
  - Push historical data via email.
  - Advanced security: Up to 16 configurable user accounts.
- Time synchronization via:
  - GPS clock (RS-485) or IRIG-B (digital input) to +/- 1 millisecond.

Also supports Network Time Protocol (NTP/SNTP) and time set function from EcoStruxure software server.

Adaptability

- ION™ frameworks allow customizable, scalable applications, object-oriented programming, compartmentalizes functions, and increases flexibility and adaptability.
- Applications include: access and aggregate data from Modbus devices on serial port or across the network (Modbus TCP/IP), logging and/or processing data by totalizing, unit conversion or other calculations, applying complex logic for alarming or control operations, data visualization via web pages.

Standard meter I/O

- 3 digital status/counter inputs.
- 1 KY (form A) energy pulse output for interfacing with other systems.

Modular I/O options

- Optional expansion modules (up to 4 per meter) add digital/analogue I/O.

Option modules include:

- Digital module
  - 6 digital status/counter inputs.
  - 2 Form C relay outputs, 250 V, 8 A
- Analogue module.
  - 4 analogue inputs (4-20 mA; 0-30 V)
  - 2 analogue outputs (4-20 mA; 0-10 V) for interfacing with building management sensors and systems

Standards

- IEC 61000-4-30
- IEC 61000-4-7
- IEC 61000-4-15
- IEC 61326-1
- ANSI C12.20
- IEC 62052-11
- IEC 62053-22
- IEC 62053-23
- CLC/TR50579

Languages supported

- English, French, Spanish, Chinese, Italian, German, Russian, Portuguese

Feature selection

Commercial reference number	Description
METSEION7400	ION7400 Panel mount meter (integrated display with optical port and 2 energy pulse LEDs)
METSEION7410	ION7400 Panel mount meter (integrated display with optical port and 2 energy pulse LEDs) 20-60 V DC control power
METSEION7403	DIN rail mount - utility meter base
METSEION7413	DIN rail mount - utility meter base 20-60 V DC control power
Accessories	**Description**
METSEPM89RD96	Remote display, 3 metre cable, mounting hardware for 30 mm hole (nut & centering pin), mounting hardware for DIN96 cutout (92 x 92 mm) adapter plate
METSEPM89M2600	Digital I/O module (6 digital inputs & 2 relay outputs)
METSEPM89M0024	Analogue I/O module (4 analogue inputs & 2 analogue outputs)
METSECAB10	Display Cable, 10 m
METSEPM8000SK	Sealing kit

ION7400 series

PB113686

Feature guide		ION7400
General		
Use on LV and MV systems		■
Current accuracy (5 A Nominal)		0.1 % reading
Voltage accuracy (90-690 V AC L-L, 50, 60, 400 Hz)		0.1 % reading
Active energy accuracy		0.2 %
Reactive energy accuracy		2 %
Number of samples/cycle or sample frequency		256
Instantaneous rms values		
Current, voltage, frequency		■
Active, reactive, apparent power	Total and per phase	■
Power factor	Total and per phase	■
Current measurement range (autoranging)		0.05 A - 10 A
Energy values		
Active, reactive, apparent energy		■
Settable accumulation modes		■
Demand values		
Current	Present and max. values	■
Active, reactive, apparent power	Present and max. values	■
Predicted active, reactive, apparent power		■
Synchronisation of the measurement window		■
Setting of calculation mode	Block, sliding	■
Power quality measurements		
Harmonic distortion	Current and voltage	■
Individual harmonics	Via front panel and web page	31
	Via EcoStruxure software	63
Waveform capture		■
Detection of voltage swells and sags		■
Flicker		■
Fast acquisition	1/2 cycle data	■
EN 50160 compliance checking		■
Customizable data outputs (using logic and math functions)		■
Data recording		
Min/max of instantaneous values		■
Data logs		■
Event logs		■
Trending/forecasting		■
SER (Sequence of event recording)		■
Time stamping		■
GPS synchronisation (+/- 1 ms)		■
Memory (in Mbytes)		512
Display and I/O		
Front panel display 89 mm TFT		■
Wiring self-test		■
Pulse output		1
Digital Analogue		6 In / 2 Out 4 In / 2 Out
Digital or analogue outputs (max, including pulse output)		1 digital 8 relay 8 analogue
Communication		
RS-485 port		1
10/100BASE-TX		2
Serial port (Modbus, ION, DNP3, DLMS/COSEM)		■
Ethernet port (Modbus/TCP, ION TCP, DNP3 TCP, IEC 61850, DLMS/COSEM)		■
USB port (mini type B)		■
ANSI C12.19 Optical port		■

All the communications ports may be used simultaneously

ION7400 series

Electrical characteristics		ION7400
Type of measurement		True rms to 256 samples per cycle
Measurement accuracy	Current & voltage	Class 0.2 as per IEC 61557-12
	Active Power	Class 0.2 as per IEC 61557-12
	Power factor	Class 0.5 as per IEC 61557-12
	Frequency	Class 0.2 as per IEC 61557-12
	Active energy	Class 0.2S IEC 62053-22 (In=5A) Class 0.2 IEC 61557-12, ANSI C12.20 Class 0.2
	Reactive Energy	Class 2 IEC 62053-23
Data update rate		1/2 cycle or 1 second
Input-voltage characteristics	Specified accuracy voltage	57 V L-N/100 V L-L to 400 V L-N/690 V L-L
	Impedance	5 MΩ per phase
	Specified accuracy frequency - Frequency	42 to 69 Hz (50/60 Hz nominal)
	Limit range of operation - frequency	20 Hz to 450 Hz
Input-current characteristics	Rated nominal current	1 A (0.2S), 5 A (0.2S) , 10 A (0.2 ANSI)
	Specified accuracy current range	Starting Current: 5 mA Accurate Range: 50 mA - 10 A
	Permissible overload	200 A rms for 0.5s, non-recurring
	Impedance	0.0003 Ω per phase
	Burden	0.024 VA at 10 A
Power supply	AC	90-415 V AC ±10 % (50/60 Hz ± 10%)
	DC	120-300 V DC ±10 % 20–60 V DC, ±10 % at 17 Watts
	Ride-through time	100 ms (6 cycles at 60 Hz) min., any condition 200 ms (12 cycles at 60 Hz) typ., 120 V AC, 110-415 V DC 500 ms (30 cycles at 60 Hz) typ., 415 V AC
	Burden	Meter Only: 18 VA max at 415 V AC, 6W at 300 V DC Fully optioned meter: 36 VA max at 415 V AC, 17 W at 300 V DC.
Input/outputs	Meter Base Only	3 form A digital inputs (30 V AC/60 V DC) 1 form A (KY) solid state digital output (30 V AC/60 V DC, 75 mA).
	Optional	Digital - 6 form A digital inputs (30 V AC / 60 V DC) wetted + 2 form C relay outputs (250 V AC / 30 V DC, 8 A at 250 V AC or 5 A at 24 V DC)
		Analogue - 4 analogue inputs (4-20 mA, 0-30 V DC) + 2 analogue outputs (4-20 mA, 0-10 V DC).
Mechanical characteristics		
Weight		Integrated Display Model 0.710 kg (without option modules) DIN rail mounted Model 0.530 kg (without remore display or option modules) IO modules 0.140 kg Remote display 0.300 kg
IP degree of protection		IP 54, UL type 12: Panel mount and Remote display, front. IP 30: Panel mount rear, DIN rail mount, I/O modules.
Dimensions	Panel mount model	98 x 112 x 78.5 mm
	DIN model	90.5 x 90.5 x 90.8 mm
	Remote display	96 x 96 x 27 mm
	IO modules	90.5 x 90.5 x 22 mm
Environmental conditions		
Operating temperature		-25 °C to 70 °C
Remote Display Unit		-25 °C to 60 °C
Storage temperature		-40 °C to 85 °C
Humidity rating		5 % to 95 % non-condensing
Installation category		III
Operating altitude (maximum)		3000 m above sea level

ION7400 series

Electromagnetic compatibility	
Product standards	IEC 62052-11 and IEC 61326-1
Immunity to electrostatic discharge	IEC 61000-4-2
Immunity to radiated fields	IEC 61000-4-3
Immunity to fast transients	IEC 61000-4-4
Immunity to surges	IEC 61000-4-5
Immunity to conducted disturbances	IEC 61000-4-6
Immunity to power frequency magnetic fields	IEC 61000-4-8
Immunity to conducted disturbances, 2-150kHz	CLC/TR 50579
Immunity to voltage dips & interruptions	IEC 61000-4-11
Immunity to ring waves	IEC 61000-4-12
Conducted and radiated emissions	EN 55022, EN 55011, FCC part 15, ICES-003
Surge withstand Capability (SWC)	IEEE C37.90.1
Safety	
Safety Construction	IEC/EN 61010-1 ed.3, CAT III, 400 V L-N / 690 V L-L UL 61010-1 ed.3 and CSA-C22.2 No. 61010-1 ed.3, CAT III, 347 V L-N / 600 V L-L IEC/EN 62052-11, protective class II
Communication	
Ethernet to serial line gateway	Communicates directly with up to 32 unit load ION slave devices.
Web server	Customisable pages, new page creation capabilities, HTML/XML compatible.
Serial port RS 485	Baud rates of 2400 to 115200, pluggable screw terminal connector.
Ethernet port(s)	2 x 10/100BASE-TX, RJ45 connector (UTP).
USB port	Virtual serial port supports USB 3.0, 2.0, 1.1 using ION protocol.
Protocol	Modbus, ION, DNP3, IEC 61850, DLMS/COSEM, HTTP, FTP, SNMP, SMTP, DPWS, RSTP, NTP, SNTP, GPS protocols.
Firmware characteristics	
High-speed data recording	Down to 1/2 cycle interval burst recording, stores detailed characteristics of disturbances or outages. Trigger recording by a user-defined setpoint, or from external equipment.
Harmonic distortion	Up to 63rd harmonic (via EcoStruxure™ software) for all voltage and current inputs.
Sag/swell detection	Analyse severity/potential impact of sags and swells: magnitude and duration data suitable for plotting on voltage tolerance curves per phase triggers for waveform recording, control.
Disturbance direction detection	Determine the location of a disturbance more quickly and accurately by determining the direction of the disturbance relative to the meter. Analysis results are captured in the event log, along with a timestamp and confidence level indicating level of certainty.
Instantaneous	High accuracy of standard speed (1s) and high-speed (1/2 cycle) measurements, including true rms per phase and total for: voltage, current, active power (kW),reactive power (kvar), apparent power (kVA), power factor, frequency, voltage and current unbalance, phase reversal.
Load profiling	Channel assignments (800 channels via 50 data recorders) configurable for any measurable parameter, including historical trend recording of energy, demand, voltage, current, power quality, or any measured parameter. Trigger recorders based on time interval, calendar schedule, alarm/event condition, or manually.
Trend curves	Historical trends and future forecasts to better manage demand, circuit loading, and other parameters. Provides average, min, max and standard deviation every hour for last 24 hours, every day for last month, every week for last 8 weeks and every month for last 12 months.
Waveform captures	Simultaneous capture of all voltage and current channels sub-cycle disturbance capture, maximum cycles is 100,000 (16 samples/cycle x 96 cycles, 10 MB memory), max 256 samples/cycle.
Alarms	Threshold alarms: adjustable pickup and dropout setpoints and time delays, numerous activation levels possible for a given type of alarm, user-defined or automatic alarm threshold settings, user-defined priority levels (optional automatic alarm setting).

All the communication ports may be used simultaneously.

ION7400 meter parts descriptions

PB115154

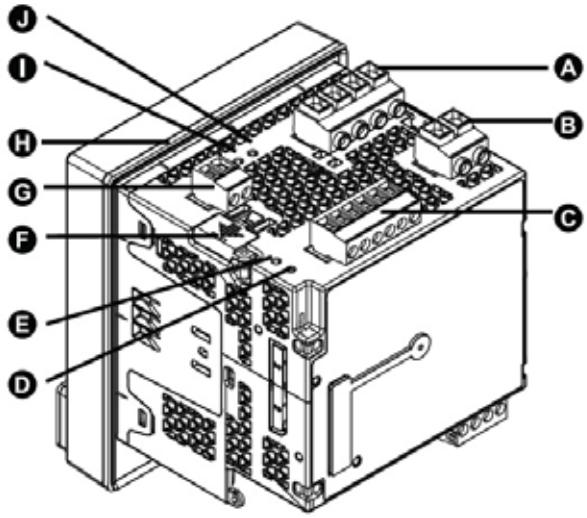

PB115155

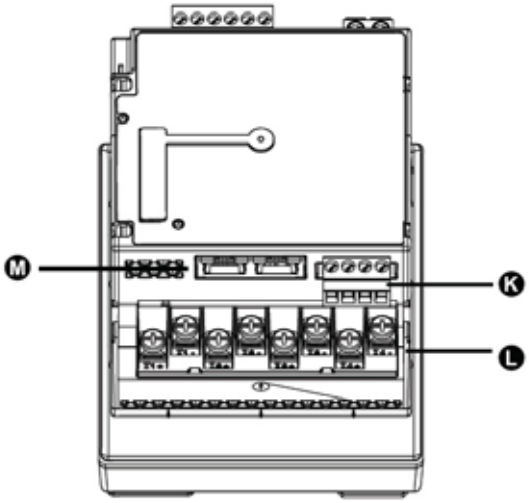

PB115156

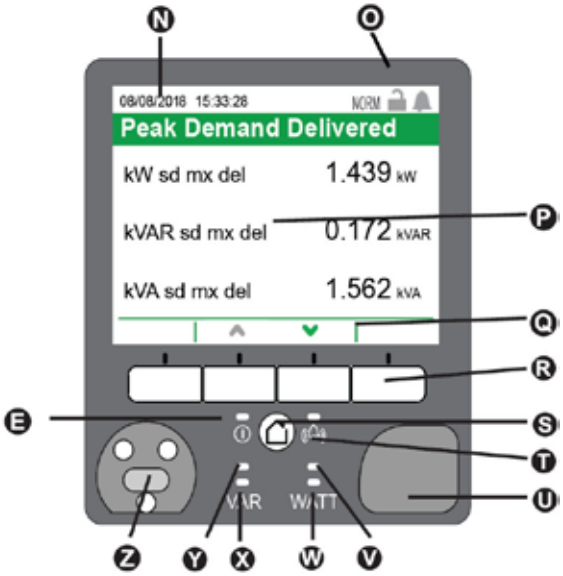

A Voltage inputs

B Control power

C Digital inputs

D Revenue lock LED

E Status LED (2 green/red)

F Revenue lock switch

G Digital output

H Sealing gasket

I Infrared energy pulsing LED

J Energy pulsing LED

K RS-485

L Current inputs

M Ethernet (2)

N Date/time

O Indicator icons

P Display

Q Navigation icons

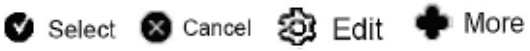

R Navigation buttons

S Home button

T Alarm LED (red)

U USB ports cover

V Watt energy pulsing LED

W Watt infrared energy pulsing LED

X VAR infrared energy pulsing LED

Y VAR energy pulsing LED

Z Optical port

ION7400 meter dimensions

PB115157_m

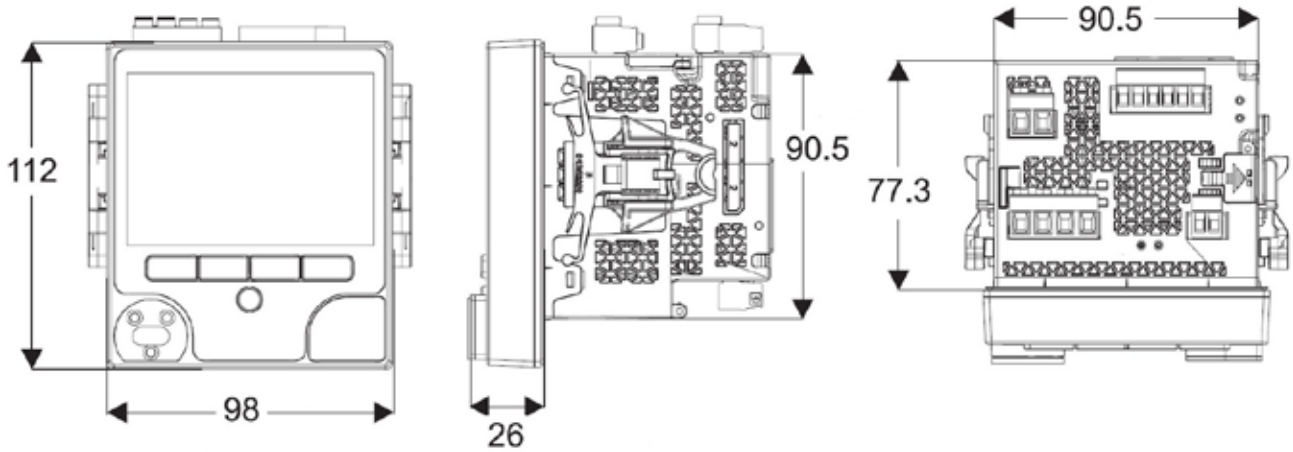

ION7400 panel cutout dimensions

PB115158

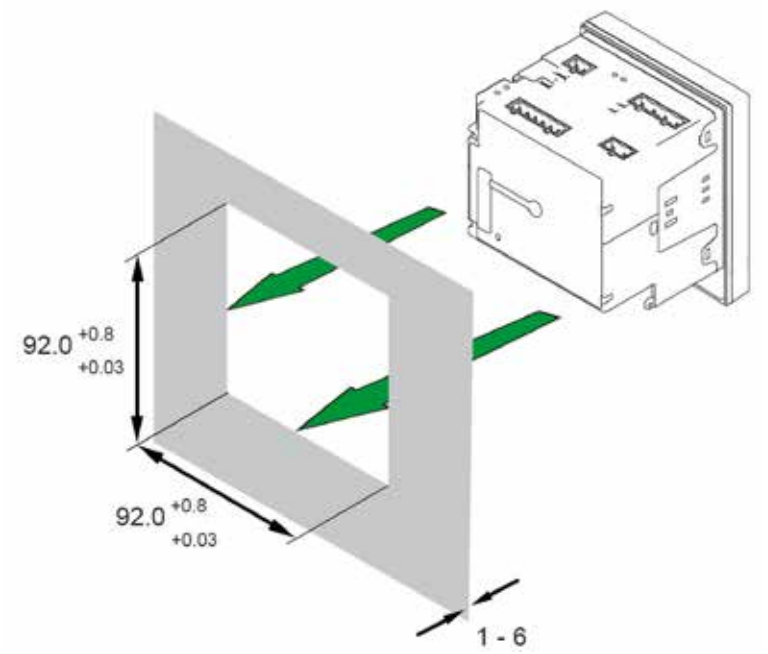

For further details please see appropriate Schneider Electric Installation Guide for this product.

Schneider Electric Industries SAS
35, Rue Joseph Monier,
CS 30323
F - 92506 Rueil Malmaison Cedex

RCS Nanterre 954 503 439
Capital social 896 313 776
www.schneider-electric.com

Product name
PLSED310113EN

As standards, specifications and designs develop from time to time, please ask for confirmation of the information given in this document.

Design: Schneider Electric
Photos: Schneider Electric

Over 75 % of Schneider Electric products have been awarded the Green Premium ecolabel

© 2019 - Schneider Electric - All rights reserved

06-2019

Life Is On | Schneider Electric