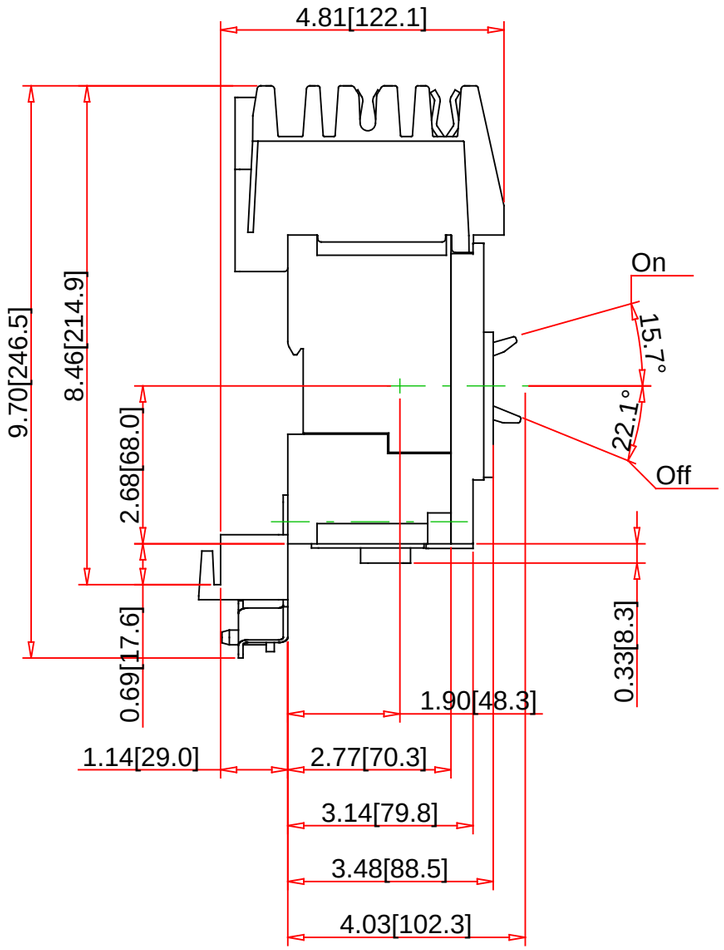

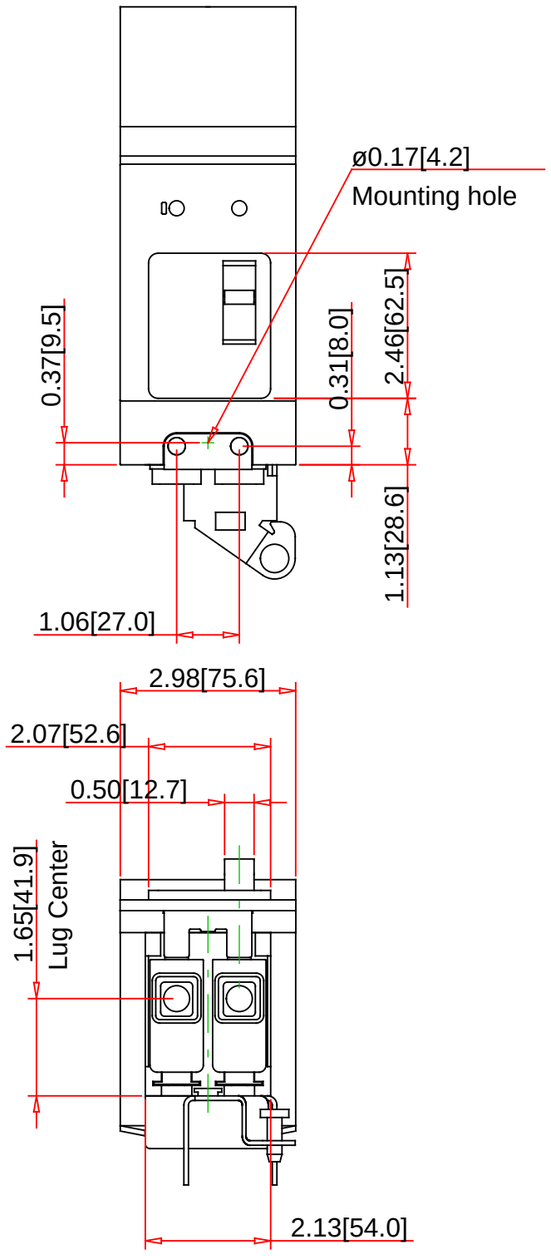

Note:
- Drawings Not To Scale
- Drawings Subject to Change Without Notice
- Dimensions are inches next to [Millimeters]

Part No.:

BGA24035Y1

Schneider Electric United States
North American Division
Boston One Campus
800 Federal Street
Andover, MA 01810, USA
Phone:+1 8773425173
Email: CCC@us.schneider-electric.com

Technical Information:

General Application:	Provides overload and short circuit protection
Approvals:	UL Listed - CSA Certified - IEC Rated
Mounting Type:	I-Line
Terminal Type:	ON end: I-Line / OFF end: Mechanical Lugs
Weight:	2
Depth:	
Height:	
Width:	
Mounting Height:	3

Specification:

Description:	PowerPact B-Frame Thermal Magnetic Circuit Breaker
Number of Poles:	2-Pole
Ampere Rating:	035
Voltage Rating:	480Y/277 VAC
Interrupting Rating:	65kA at240VAC 35kA at480Y/277VAC
Circuit Breaker Rating:	80% Rated
Fixed AC Magnetic Trip:	Hold: 400A - Trip: 600A