Product data sheet
Characteristics

NQ42L2C
NQ Pnlbrd Interior 225A, 1 PH, 3 Wire, 42 CCT, Mn Lug, Cu

Main

Panelboard Type	Main lugs
Branch Circuit Breaker Type	QOB QOB-VH QHB
Busbar Material	Copper

Complementary

Number of spaces	42
Enclosure Nominal Height	38 in (965.20 mm)
Enclosure Nominal Width	20 in (508.00 mm)
Enclosure Nominal Width	5.75 In (146.05 mm) NEMA 1 6.5 in (165.10 mm) NEMA 3R/5/12
Line Rated Current	225 A
[Iu] rated interrupted current	10 KA 22 KA 65 kA
Wiring configuration	3-wire
Number of Phases	1 phase
Voltage Rating	240 V AC 48 V DC
Tightening torque	40.01…50.01 Lbf.In (4.52…5.65 N.m) 0.02…0.10 in² (13.30…67.43 mm²) AWG 6...AWG 2/0) 100.01 Lbf.In (11.3 N.m) 0.02…0.10 in² (13.30…67.43 mm²) AWG 6...AWG 2/0) 274.99 Lbf.In (31.07 N.m) 0.02…0.27 in² (13.30…177.3 mm²) AWG 6...350 kcmil) 274.99 Lbf.In (31.07 N.m) 0.02…0.20 in² (13.30…126.7 mm²) AWG 6...250 kcmil) 274.99 lbf.in (31.07 N.m) 0.17…0.24 in² (107.2…152 mm²) AWG 4...300 kcmil)
Maximum Width	10.44 in (265.18 mm)
Maximum Height	33.00 in (838.20 mm)

Environment

Standards	UL CSA

Ordering and shipping details

Category	09151 - NQ RTA PANELBOARDS
Discount Schedule	PE1A
GTIN	00785901502210
Nbr. of units in pkg.	1
Package weight(Lbs)	20.16 lb(US) (9.14 kg)
Returnability	Yes
Country of origin	MX

The information provided in this documentation contains general descriptions and/or technical characteristics of the performance of the products contained herein.
This documentation is not intended as a substitute for and is not to be used for determining suitability or reliability of these products for specific user applications.
It is the duty of any such user or integrator to perform the appropriate and complete risk analysis, evaluation and testing of the products with respect to the relevant specific application or use thereof.
Neither Schneider Electric Industries SAS nor any of its affiliates or subsidiaries shall be responsible or liable for misuse of the information contained herein.

Packing Units

Unit Type of Package 1	PCE
Package 1 Height	6.50 in (16.51 cm)
Package 1 width	14.00 in (35.56 cm)
Package 1 Length	38.00 in (96.52 cm)
Unit Type of Package 2	PAL
Number of Units in Package 2	18
Package 2 Weight	173.27 kg
Package 2 Height	42.00 in (106.68 cm)
Package 2 width	40.00 in (101.6 cm)
Package 2 Length	48.00 in (121.92 cm)

Offer Sustainability

Sustainable offer status	Green Premium product
California proposition 65	WARNING: This product can expose you to chemicals including: Nickel compounds and Di-isodecyl phthalate (DIDP) which is known to the State of California to cause Carcinogen and Reproductive harm. For more information go to www.p65warnings.ca.gov
REACh free of SVHC	Yes
EU RoHS Directive	Compliant EU RoHS Declaration
Mercury free	Yes
RoHS exemption information	Yes
China RoHS Regulation	China RoHS Declaration
Environmental Disclosure	Product Environmental Profile

Contractual warranty

Warranty	18 months

NQ42L2C

Approximate Dimensions

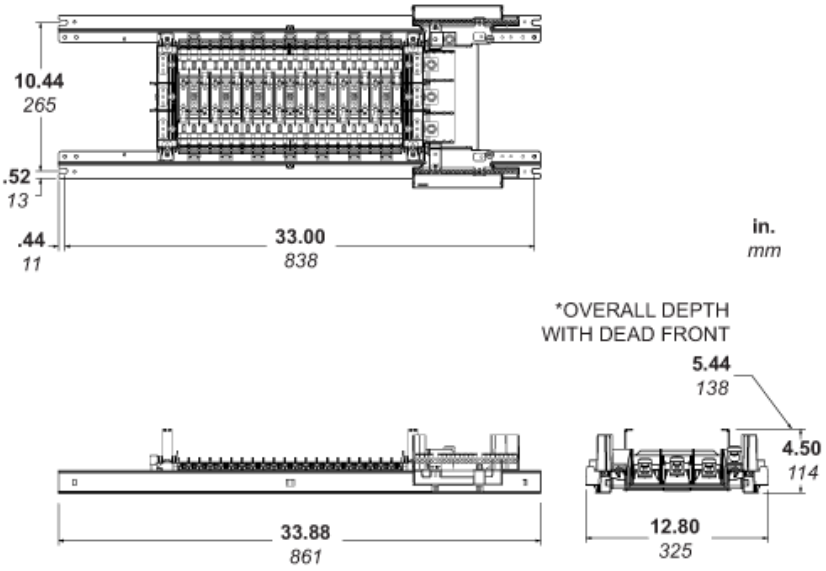

Catalog	Phase/Wire	Bus Thickness	Bus Material	Lug Size
NQ442L2C	3P 4W	.25	CU	#6–350 KCMIL
NQ42L2C	1P 3W	.25	CU	#6–350 KCMIL
NQ442L2	3P 4W	.25	AL	#6–350 KCMIL
NQ42L2	1P 3W	.25	AL	#6–350 KCMIL