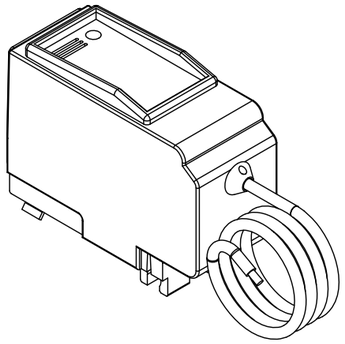

ISOMETRIC

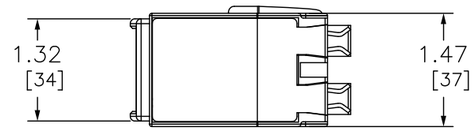

TOP

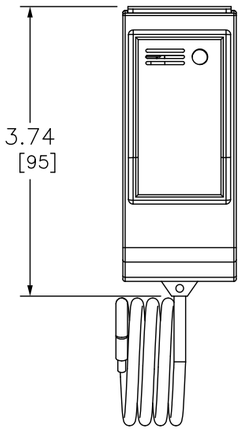

LEFT

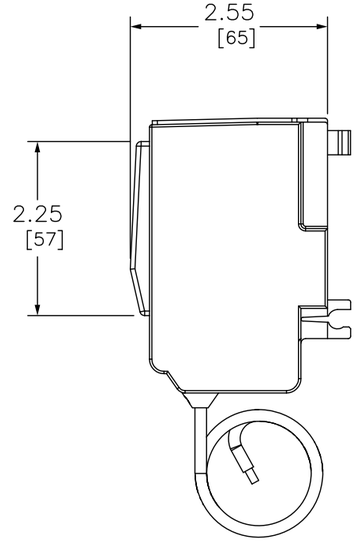

FRONT

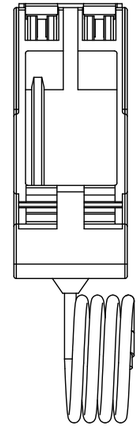

RIGHT

DUAL DIMENSIONS: INCHES
MILLIMETERS

LOAD CENTER QO SECONDARY SURGE ARRESTOR

SQUARE D™
by Schneider Electric

DWG# NO. QO2175SB

AUGUST 2017