Momentum for Unity Pro

171 CBU 78090, 171 CBU 98090, 171 CBU 98091 Processors

User Guide

10/2014

HRB44124.01

www.schneider-electric.com

Schneider Electric

The information provided in this documentation contains general descriptions and/or technical characteristics of the performance of the products contained herein. This documentation is not intended as a substitute for and is not to be used for determining suitability or reliability of these products for specific user applications. It is the duty of any such user or integrator to perform the appropriate and complete risk analysis, evaluation and testing of the products with respect to the relevant specific application or use thereof. Neither Schneider Electric nor any of its affiliates or subsidiaries shall be responsible or liable for misuse of the information contained herein. If you have any suggestions for improvements or amendments or have found errors in this publication, please notify us.

No part of this document may be reproduced in any form or by any means, electronic or mechanical, including photocopying, without express written permission of Schneider Electric.

All pertinent state, regional, and local safety regulations must be observed when installing and using this product. For reasons of safety and to help ensure compliance with documented system data, only the manufacturer should perform repairs to components.

When devices are used for applications with technical safety requirements, the relevant instructions must be followed.

Failure to use Schneider Electric software or approved software with our hardware products may result in injury, harm, or improper operating results.

Failure to observe this information can result in injury or equipment damage.

© 2014 Schneider Electric. All rights reserved.

Table of Contents

Safety Information 7
About the Book 9
Chapter 1 Introducing the 171 CBU 78090, 171 CBU 98090 & 171 CBU 98091 Processors 11
1.1 Momentum 171 CBU 78090, 171 CBU 98090 & 171 CBU 98091 Processors for Unity Pro 12
Adding the Momentum 171 CBU 78090, 171 CBU 98090 and 171 CBU 98091 Processors to Unity Pro 12
1.2 The 171 CBU 78090 Processor 13
171 CBU 78090 Processor Physical Description 14
171 CBU 78090 Processor Specifications 16
1.3 The 171 CBU 98090 and 171 CBU 98091 Processors 17
171 CBU 98090 and 171 CBU 98091 Physical Description 18
171 CBU 98090 and 171 CBU 98091 Specifications 20
1.4 Agency Standards 21
Agency Standards and Certifications 21
Chapter 2 Communication Ports on 171 CBU 78090, 171 CBU 98090 and 171 CBU 98091 Processors 23
2.1 Serial Ports 24
171 CBU 78090, 171 CBU 98090 and 171 CBU 98091 Serial Port Locations 25
171 CBU 78090, 171 CBU 98090 and 171 CBU 98091 Serial Port Parameters 26
171 CBU 78090, 171 CBU 98090 and 171 CBU 98091 Serial Port Pin Assignment 28
2.2 Ethernet Port 30
171 CBU 98090 and 171 CBU 98091 Ethernet Port Location 31
171 CBU 98090 and 171 CBU 98091 Ethernet Port Features 32
171 CBU 98090 and 171 CBU 98091 Ethernet Port Pin Assignment . 34
Assigning IP Addressing Parameters to the 171 CBU 98090 and 171 CBU 98091 36

2.3 USB Port 38
171 CBU 78090, 171 CBU 98090 and 171 CBU 98091 USB Port Location 39
171 CBU 78090, 171 CBU 98090 and 171 CBU 98091 USB Port Features 40
171 CBU 78090, 171 CBU 98090 and 171 CBU 98091 USB Port Pin Assignment 42
2.4 I/O-Bus Port 43
171 CBU 78090, 171 CBU 98090 and 171 CBU 98091 I/O-Bus Port Location 44
How I/O-Bus Works with Momentum Components 45
I/O-Bus Port Features 46
171 CBU 78090, 171 CBU 98090 and 171 CBU 98091 I/O-Bus Port Pin Assignment 47
Chapter 3 Installing the 171 CBU 78090, 171 CBU 98090 and 171 CBU 98091 Processors 49
Assembling the Processor 50
Mounting the 171 CBU 78090, 171 CBU 98090 and 171 CBU 98091 Processors 56
Establishing an Electrical Ground for the 171 CBU 78090, 171 CBU 98090 and 171 CBU 98091 Processors 58
Disassembling a Momentum Processor from an I/O Base 59
Chapter 4 Configuring the 1171 CBU 78090, 171 CBU 98090 and 171 CBU 98091 Processors in Unity Pro 63
4.1 Creating a New Momentum Project in Unity Pro 64
Creating a New Momentum Project in Unity Pro 64
4.2 Configuring the CPU in Unity Pro 67
Configuring the 171 CBU 78090, 171 CBU 98090 and 171 CBU 98091 Processors 68
Using the State RAM Viewer 72
4.3 Configuring Serial Communication for the 171 CBU 78090, 171 CBU 98090 and 171 CBU 98091 Processors in Unity Pro 74
Accessing Serial Link Parameters in Unity Pro 75
Serial Link Parameters and Settings in Unity Pro 77
4.4 Creating the I/O-Bus 82
Creating the I/O-Bus in Unity Pro 83
Addressing on the I/O-Bus 89
Configuring Momentum Analog I/O Modules 92
Configuring Discrete Momentum I/O Modules 93
Configuring the I/O Base: Memory Tab 95
Configuring Channels on the 170 AEC 920 00 Counter Module 98

4.5 Configuring the Ethernet Port in Unity Pro 102
Configuring the 171 CBU 98090 and 171 CBU 98091 Ethernet Port . 102
4.6 Configuring Ethernet Services 107
Enabling Ethernet Services 108
Configuring IP Address Settings in Unity Pro 109
Modbus Messaging and Access Control 111
I/O Scanning 114
Global Data 119
SNMP 123
Bandwidth Monitoring 125
4.7 Programming In Unity Pro 129
Programming the Momentum Platform in Unity Pro 129
4.8 Momentum-Specific System Words 131
Description of System Words %SW128 to %SW152 131
Chapter 5 Converting and Importing Legacy Applications 135
Importing and Converting Legacy LL984 Applications in Unity Pro. . . 136
Re-Wiring an RS485 4-Wire Serial for 2-Wire Operations 141
RJ45 Cable for RS485 Serial Communication 142
Chapter 6 Diagnostics and Maintenance 143
6.1 LED Diagnostics 144
171 CBU 78090, 171 CBU 98090 and 171 CBU 98091 CPU Status LEDs 145
171 CBU 78090, 171 CBU 98090 and 171 CBU 98091 Communication Status LEDs. 146
CPU Status Detected Error Codes 148
6.2 Web Server Diagnostics 150
Accessing the Home Page 152
Diagnostics Web Page 153
CPU Status Web Page 154
Global Data Web Page 158
IO Scanning Web Page 160
Messaging Web Page 162
Bandwidth Monitoring Page. 163
Ethernet Statistics Web Page 164
Properties Web Page 167
Monitoring Web Page 168
Data Viewer Web Page 169

6.3 Upgrading Firmware for the 171 CBU 78090, 171 CBU 98090 and 171 CBU 98091 Processors 171
Upgrading Firmware on the 171 CBU 78090, 171 CBU 98090 and 171 CBU 98091 Processors 171
6.4 Reinforcing the Assembly in a High Vibration Environment 176
Installing the Processor in a High Vibration Environment 176
Appendices 179
Appendix A Momentum I/O Bases for the 171 CBU 78090, 171 CBU 98090 and 171 CBU 98091 Processors 181
Momentum I/O Bases for 171 CBU 78090, 171 CBU 98090 and 171 CBU 98091 Processors 181
Index 183

Safety Information

Important Information

NOTICE

Read these instructions carefully, and look at the equipment to become familiar with the device before trying to install, operate, or maintain it. The following special messages may appear throughout this documentation or on the equipment to warn of potential hazards or to call attention to information that clarifies or simplifies a procedure.

The addition of this symbol to a “Danger” or “Warning” safety label indicates that an electrical hazard exists which will result in personal injury if the instructions are not followed.

This is the safety alert symbol. It is used to alert you to potential personal injury hazards. Obey all safety messages that follow this symbol to avoid possible injury or death.

⚠ DANGER

DANGER indicates a hazardous situation which, if not avoided, **will result in** death or serious injury.

⚠ WARNING

WARNING indicates a hazardous situation which, if not avoided, **could result in** death or serious injury.

⚠ CAUTION

CAUTION indicates a hazardous situation which, if not avoided, **could result** in minor or moderate injury.

NOTICE

NOTICE is used to address practices not related to physical injury.

PLEASE NOTE

Electrical equipment should be installed, operated, serviced, and maintained only by qualified personnel. No responsibility is assumed by Schneider Electric for any consequences arising out of the use of this material.

A qualified person is one who has skills and knowledge related to the construction and operation of electrical equipment and its installation, and has received safety training to recognize and avoid the hazards involved.

About the Book

At a Glance

Document Scope

This manual describes the following Momentum processors for Unity Pro:

- 171 CBU 78090
- 171 CBU 98090
- 171 CBU 98091

Validity Note

The Momentum 171 CBU 78090, 171 CBU 98090 and 171 CBU 98091 processors described in this manual require the use of Unity Pro V 8.1 or later.

Related Documents

Title of Documentation	Reference Number
Modicon Momentum I/O Base User Guide	English (31001697), French (709604), German (709136), Italian (31007277), Spanish (31002238), Chinese (31007104)
Unity Loader a SoCollaborative Software User Manual	English (33003805), French (33003806), German (33003807), Italian (33003809), Spanish (33003808), Chinese (33003810)

You can download these technical publications and other technical information from our website at www.schneider-electric.com.

Chapter 1
Introducing the 171 CBU 78090, 171 CBU 98090 & 171 CBU 98091 Processors

Overview

This chapter introduces the 171 CBU 78090, 171 CBU 98090, and 171 CBU 98091 processors.

What Is in This Chapter?

This chapter contains the following sections:

Section	Topic	Page
1.1	Momentum 171 CBU 78090, 171 CBU 98090 & 171 CBU 98091 Processors for Unity Pro	12
1.2	The 171 CBU 78090 Processor	13
1.3	The 171 CBU 98090 and 171 CBU 98091 Processors	17
1.4	Agency Standards	21

Section 1.1
Momentum 171 CBU 78090, 171 CBU 98090 & 171 CBU 98091 Processors for Unity Pro

Adding the Momentum 171 CBU 78090, 171 CBU 98090 and 171 CBU 98091 Processors to Unity Pro

Momentum Comes to Unity Pro

With the release of the 171 CBU 78090, 171 CBU 98090 and 171 CBU 98091 processors, Schneider Electric introduces to Unity Pro low-cost, yet powerful Momentum CPUs. This release provides customers with the following benefits:

- For Unity Pro users:
  - Enjoy the cost savings of adding powerful Momentum processors to your existing applications.
  - Continue to use Unity Pro to develop, monitor, and troubleshoot your existing applications.
- For Momentum users, use Unity Pro to:
  - Continue to program your Momentum projects using the LL984 programming language.
  - Add program tasks created with the IEC languages – including Ladder Diagram (LD), Function Block Diagram (FBD), Structured Text (ST), Instruction List (IL), and Sequential Function Chart (SFC) – to your existing control network projects.
  - Add powerful M340, M580, Premium, and Quantum platform CPUs to your existing projects, which you can now develop, monitor and troubleshoot with Unity Pro.

Section 1.2
The 171 CBU 78090 Processor

Overview

This section describes the basic features of the 171 CBU 78090 processor.

What Is in This Section?

This section contains the following topics:

Topic	Page
171 CBU 78090 Processor Physical Description	14
171 CBU 78090 Processor Specifications	16

171 CBU 78090 Processor Physical Description

Key Features

The key features of the 171 CBU 78090 processor include:

- memory retention of application program and data without a battery
- embedded real time clock: sustainable for 72 hours without external power, via a maintenance-free super capacitor
- support for the following communication protocols:
  - Modbus Serial RS485
  - Modbus Serial RS232
- I/O-Bus port with DB9 connector
- 2 RJ45 connector ports:
  - 1 fixed RS485 2-wire port
  - 1 configurable RS232/RS485 2-wire port
- diagnostic web pages accessible via USB
- diagnostic LEDs for I/O, serial communication, and CPU status

Port and LED Locations

The processor communication ports and LEDs:

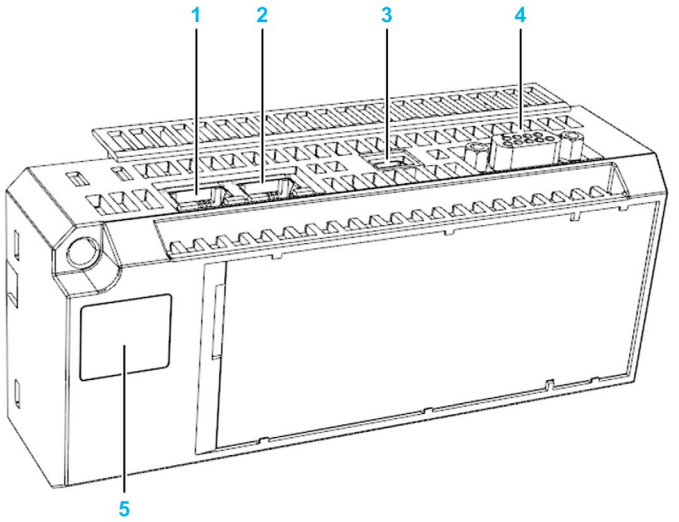

1 serial RS485 fixed port with RJ45 connector
2 serial RS232/485 configurable port with RJ45 connector
3 USB port with mini-B connector
4 I/O-Bus port with DB9 F connector
5 LED panel

LEDs

The processor features the following LED panel display:

Each LED on the panel indicates the following:

LED	Color	Indicates...
RUN	green	CPU operating status
ERR	red	Error detected in module operation
I/O	red	Error detected on the local base or remote I/O-Bus
MB1 CH0	yellow	Communication activity on the configurable RS232/RS485 serial port, channel 0
MB2 CH1	yellow	Communication activity on fixed RS485 serial port, channel 1

NOTE: Refer to the section LED Diagnostics *(see page 144)* for information describing how to use the LEDs to diagnose the state of the processor and I/O operations.

171 CBU 78090 Processor Specifications

Processor Specifications

Specification			Description
Module number			171 CBU 78090
Temperature	Operating		0° ...60° C (32° ...140° F)
	Storage		–40° ...85° C (–40° ...185° F)
Humidity			maximum 96% (non-condensing)
Altitude			2000 m (6500 ft)
Power (from I/O base)	Voltage		5 Vdc
	Current		500 mA maximum
Hot swap capable?			No
Dielectric strength			1500 Vrms (1500 Vac, 2100 Vdc) between logic common and ground
Retention memory capacity[1]			128 K bytes
User application memory[1]			3590 K bytes
CPU clock speed			333 MHz
Real Time Clock	Accuracy	Powered	16 minutes per year (without calibration)
		Non-powered	6 seconds per 72 hours (retention duration)
	Retention time		72 hours
	Battery		none required (embedded super capacitor)
Communication ports			1 - RS232/RS485 configurable serial port (channel 0)
			1 - RS485 fixed serial port (channel 1)
			1 - USB port
			1 - I/O-Bus port
1. In the absence of power from the I/O base, state RAM is retained by a super capacitor. A battery is not required.			

Section 1.3
The 171 CBU 98090 and 171 CBU 98091 Processors

Overview

This section describes the basic features of the 171 CBU 98090 and 171 CBU 98091 processors.

What Is in This Section?

This section contains the following topics:

Topic	Page
171 CBU 98090 and 171 CBU 98091 Physical Description	18
171 CBU 98090 and 171 CBU 98091 Specifications	20

171 CBU 98090 and 171 CBU 98091 Physical Description

Key Features

The key features of the 171 CBU 98090 and 171 CBU 98091 processors include:

- memory retention of application program and data without a battery
- embedded real time clock: sustainable for 72 hours without external power, via a maintenance-free super capacitor
- support for the following communication protocols:
  - Modbus Serial RS485
  - Modbus Serial RS232
- I/O-Bus port with DB9 connector
- 2 RJ45 connector ports:
  - 1 configurable RS232 / RS485 serial port
  - 1 Ethernet port
- diagnostic web pages accessible via USB and Ethernet
- diagnostic LEDs for I/O, serial port, Ethernet port, and CPU status

Port and LED Locations

The processor communication ports and LEDs:

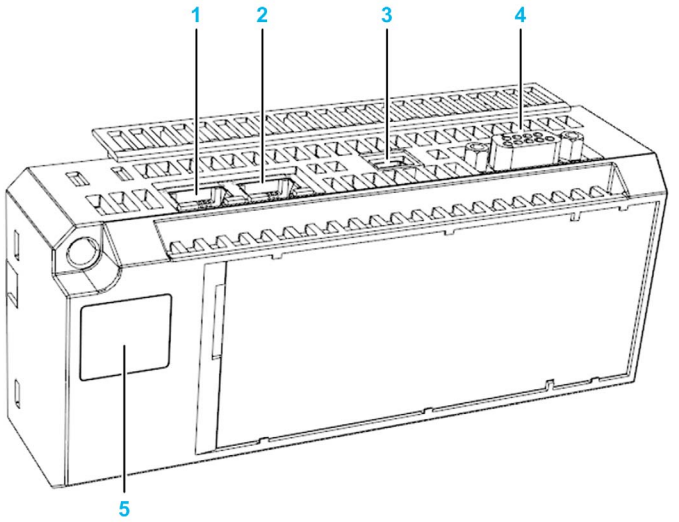

1 Ethernet port with RJ45 connector
2 serial RS232/485 configurable port with RJ45 connector
3 USB port with mini-B connector
4 I/O-Bus port with DB9 F connector
5 LED panel

LEDs

The processors feature the following LED panel display:

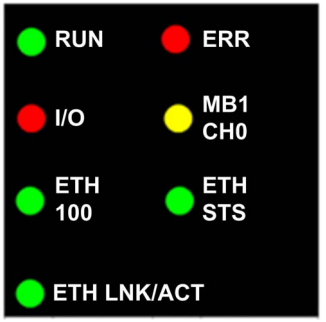

The processor LEDs indicate the following:

LED	Color	Indicates...
RUN	green	CPU operating status
ERR	red	Error detected in module operation
I/O	red	Error detected on the local base or remote I/O-Bus
MB1 CH0	yellow	Communication activity on the configurable RS232/RS485 serial port, channel 0
ETH 100	green	Ethernet port speed ● ON: 100mbps ● OFF: 10mbps
ETH STS	green	An Ethernet link is established, or an error is detected. **NOTE:** If an error is detected, the LED flashes to indicate the nature of the detected error. *(see page 146)*
ETH LNK/ACT	green	The presence of communication activity on the Ethernet port

NOTE: Refer to the section LED Diagnostics *(see page 144)* for information describing how to use the LEDs to diagnose the state of the processor and I/O operations.

171 CBU 98090 and 171 CBU 98091 Specifications

Processor Specifications

Specification			Description
Module number			• 171 CBU 98090 • 171 CBU 98091 (with Global Data service)
Temperature	Operating		0° ...60° C (32° ...140° F)
	Storage		–40° ...85° C (–40° ...185° F)
Humidity			maximum 96% (non-condensing)
Altitude			2000 m (6500 ft)
Power (from I/O base)	Voltage		5 Vdc
	Current		500 mA maximum
Hot swap capable?			No
Dielectric strength			1500 Vrms (1500 Vac, 2100 Vdc) between logic common and ground
Retention memory capacity[1]			128 K bytes
User application memory[1]			3590 K bytes
CPU clock speed			333 MHz
Real Time Clock	Accuracy	Powered	16 minutes per year (without calibration)
		Non-powered	6 seconds per 72 hours (retention duration)
	Retention time		72 hours
	Battery		none required (embedded super capacitor)
Communication ports			1 - RS232/RS485 configurable serial port (channel 0)
			1 - Ethernet port (channel 3)
			1 - USB port
			1 - I/O-Bus port
1. In the absence of power from the I/O base, state RAM is retained by a super capacitor. A battery is not required.			

Section 1.4
Agency Standards

Agency Standards and Certifications

Agency Standards

The 171 CBU 78090, 171 CBU 98090 and 171 CBU 98091 processors meet the following agency standards:

- CE (EMC and LV European directives)
- IEC 61131-2 Ed 3
- UL 508
- CSA 22.2 No. 142
- RCM
- EAC
- FM approved Class I, Division 2, Groups A, B, C, and D

Chapter 2
Communication Ports on 171 CBU 78090, 171 CBU 98090 and 171 CBU 98091 Processors

Introduction

This chapter describes the communication ports of the 171 CBU 78090, 171 CBU 98090 and 171 CBU 98091 processors.

What Is in This Chapter?

This chapter contains the following sections:

Section	Topic	Page
2.1	Serial Ports	24
2.2	Ethernet Port	30
2.3	USB Port	38
2.4	I/O-Bus Port	43

Section 2.1
Serial Ports

Overview

This section describes the serial ports included on the 171 CBU 78090, 171 CBU 98090 and 171 CBU 98091 processors.

What Is in This Section?

This section contains the following topics:

Topic	Page
171 CBU 78090, 171 CBU 98090 and 171 CBU 98091 Serial Port Locations	25
171 CBU 78090, 171 CBU 98090 and 171 CBU 98091 Serial Port Parameters	26
171 CBU 78090, 171 CBU 98090 and 171 CBU 98091 Serial Port Pin Assignment	28

171 CBU 78090, 171 CBU 98090 and 171 CBU 98091 Serial Port Locations

Physical Locations

The 171 CBU 78090 processor includes both a configurable RS232/RS485 serial port and a fixed RS485 serial port. The 171 CBU 98090 and 171 CBU 98091 processors include a single configurable RS232/RS485 serial port.

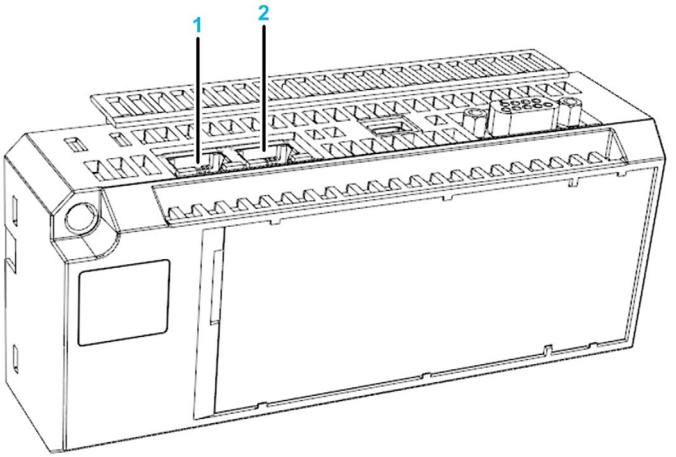

The location and type of serial port depends on the processor:

Serial Port	Processor	Serial Port Type
1	171 CBU 78090	RS485 fixed
2	171 CBU 78090	RS232/RS485 configurable
	171 CBU 98090	RS232/RS485 configurable
	171 CBU 98091	RS232/RS485 configurable

Each serial port features an RJ45 female connector. A serial port configured for RS485 supports 2-wire communications.

171 CBU 78090, 171 CBU 98090 and 171 CBU 98091 Serial Port Parameters

Modbus Mode versus Character Mode

The serial ports can operate in either Modbus mode or character mode.

When operating in Modbus mode, the serial port can be accessed by:
- local HMI for management and diagnostics
- a programming PC, for maintenance and diagnostics
- a modem connected to a central location for SCADA and data collection via RS232

When operating in character mode, you can use a serial port to:
- Send ASCII characters to a printer or a modem.
- Display data on the screen of a terminal and receive data from its keyboard.

Configuring Modbus versus Character Mode

By default, the serial ports operate in Modbus mode, but can be switched to character mode using the `L9_XMIT` or `XXMIT` instruction in the application program. When the instruction is completed, the serial port remains in character mode. To return to Modbus mode, cycle power to the processor or download the orignial configuration to the processor.

In Modbus mode, the serial port communicates using the Modbus protocol. In Modbus mode, you can use the XXMIT EF block in Unity Pro to:
- Designate each serial port to serve as either a Modbus master or slave.
- Specify the signaling protocol that will be used by the RS282/RS485 configurable serial port.

Port Parameters

The RS282/RS485 configurable serial port and the RS485 fixed serial port present the following properties and range of settings when operating in Modbus mode:

Parameter	Settings Include...

Signaling protocol	● fixed serial port
	  ● RS485 (fixed)
	● configurable serial port
	  ● RS232
	  ● RS485 (default)

Operations mode	● slave (default) ● master (using the `XXMIT` instruction)
Baud rate	● 300 ● 600 ● 1200 ● 2400 ● 4800 ● 9600 (default) ● 19200

Parameter	Settings Include...
Parity	• even (default) • odd • none
Mode/data bits	• 8-bit RTU (default) • 7-bit ASCII
Stop bit	• 1 (default) • 2
Modbus address	• 1...247 • 248 indicating point-to-point addressing Default = 1

171 CBU 78090, 171 CBU 98090 and 171 CBU 98091 Serial Port Pin Assignment

Pin Assignment

Each serial port–the fixed RS485 port and the configurable RS232/RS485 port–uses an RJ45 female connector. Pins are positioned within the female RJ45 connector for each serial port as follows:

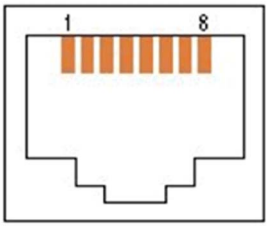

The specified standard–RS232 or RS485–determines the signal assigned to each pin for serial communications:

RJ45 Pin Number	Signal Type	
	RS232	RS485
1	DTR (data terminal ready)	Reserved
2	DSR (data set ready)	Reserved
3	TXD (transmitted data)	D1
4	RXD (received data)	Reserved
5	GND (common ground)	GND
6	RTS (request to send)	D0
7	CTS (clear to send)	Reserved
8	Cable shield	Cable shield

NOTE: The 171 CBU 78090, 171 CBU 98090 and 171 CBU 98091 RJ45 serial port pin assignments are compatible with serial port pin assignments of legacy Momentum CPUs. However, these pin assignments differ from the M340 family of CPUs.

Serial Cabling Components

You can purchase the following serial cabling components from Schneider Electric:

Part Number	Length	Description	Connector
110XCA28203	6 m	Momentum programming cable for M1	RJ45
170MCI04110	0.3 m	RS485 master communication cable	RJ45
170XTS04000	–	RS485 cable connector T	DB9/RJ45(2)

Part Number	Length	Description	Connector
170XTS04100	–	RS485 T junction cable connector	RJ45
170XTS04200	–	RS485 multi master shunt plug	RJ45

Section 2.2
Ethernet Port

Overview

This section describes the Ethernet port included on the 171 CBU 98090 and 171 CBU 98091 processors.

What Is in This Section?

This section contains the following topics:

Topic	Page
171 CBU 98090 and 171 CBU 98091 Ethernet Port Location	31
171 CBU 98090 and 171 CBU 98091 Ethernet Port Features	32
171 CBU 98090 and 171 CBU 98091 Ethernet Port Pin Assignment	34
Assigning IP Addressing Parameters to the 171 CBU 98090 and 171 CBU 98091	36

171 CBU 98090 and 171 CBU 98091 Ethernet Port Location

Physical Location

The 171 CBU 98090 and 171 CBU 98091 processors have a single Ethernet port at the location indicated, below:

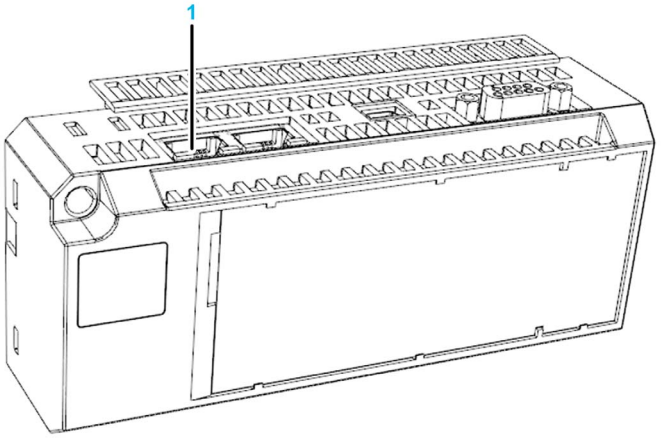

1 Ethernet port

The Ethernet port features an RJ45 female connector.

171 CBU 98090 and 171 CBU 98091 Ethernet Port Features

Ethernet Port Uses

The Ethernet port supports the following types of communication:

- peer communications with other Momentum PLCs
- communication with a higher-level PLC: The Ethernet port can be polled by–or push data to–a higher-level PLC.
- SCADA/HMI communication: The Ethernet port can be polled by a SCADA or HMI for monitoring, and can push data to a SCADA via an unsolicited write transaction.
- communication with devices and systems on other networks: for example via a gateway
- I/O scanning, programming, monitoring, and maintenance over the plant network
- Global Data service for the 171 CBU 98091 processor

Ethernet Port Features

The features of the Ethernet port include:

Feature	Description
Addressing	• Unique IEEE global (MAC) address • User assigned IP address
Application protocols supported	• DHCP/BootP • Global Data (on the 171 CBU 98091 processor) • HTTP (web server) • I/O scanner • Modbus protocol messaging • SNMP
Auto MDI/MDI-X	Supported
Auto negotiation	Supported
Connector type	Shielded RJ45 female
Max connections: Modbus TCP (port 502)	• 16 connections over the Ethernet port • 4 connections over the USB port
Max connections: web (HTTP)	2
Max client requests per cycle	4
Max server requests per cycle	4
Max message length	• 1026 bytes (on Ethernet or USB) including network headers • 253 for Modbus requests • 1019 for UMAS protocol requests
Max message throughput for Modbus TCP	The **Ethernet Environment** (or CPU load) identified in the **Bandwidth** window: • Isolated • Mastered • Open

Ethernet Services

The Ethernet port supports the following Ethernet services:

- IP address configuration from any of the following sources:
  - DHCP or BootP server
  - Unity Pro configuration *(see page 109)*
- Global Data for the 171 CBU 98091 processor *(see page 119)*
- Modbus Messaging and Access Control *(see page 111)*
- SNMP agent *(see page 123)*
- Bandwidth Monitoring *(see page 125)*
- I/O Scanning *(see page 114)* for up to 32 devices

171 CBU 98090 and 171 CBU 98091 Ethernet Port Pin Assignment

Pin Assignment

The Ethernet port uses an RJ45 female connector. Pins are positioned within the female RJ45 connector for the Ethernet port as follows

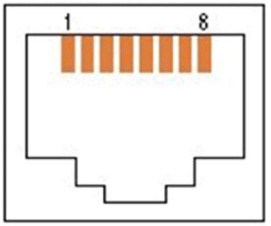

The Ethernet signals assigned to each pin include:

RJ45 Pin Number	Ethernet Signal
1	TD+ (Transmit data +)
2	TD– (Transmit data –)
3	RD+ (Receive data +)
4	Not connected
5	Not connected
6	RD– (Receive data –)
7	Not connected
8	Not connected

Ethernet Cables

You can purchase the following Ethernet cables from Schneider Electric:

Part Number	Length	Description	Connector	Marking
TCSECE3M3M1S4	1 m	Cat 5e shielded, twisted pair straight cable	RJ45	CE
TCSECU3M3M1S4	1 m	Cat 5e shielded, twisted pair straight cable	RJ45	UL
TCSECE3M3M2S4	2 m	Cat 5e shielded, twisted pair straight cable	RJ45	CE
TCSECU3M3M2S4	2 m	Cat 5e shielded, twisted pair straight cable	RJ45	UL
TCSECE3M3M3S4	3 m	Cat 5e shielded, twisted pair straight cable	RJ45	CE

Part Number	Length	Description	Connector	Marking
TCSECU3M3M3S4	3 m	Cat 5e shielded, twisted pair straight cable	RJ45	UL
TCSECE3M3M5S4	5 m	Cat 5e shielded, twisted pair straight cable	RJ45	CE
TCSECU3M3M5S4	5 m	Cat 5e shielded, twisted pair straight cable	RJ45	UL
TCSECE3M3M10S4	10 m	Cat 5e shielded, twisted pair straight cable	RJ45	CE
TCSECU3M3M10S4	10 m	Cat 5e shielded, twisted pair straight cable	RJ45	UL

Assigning IP Addressing Parameters to the 171 CBU 98090 and 171 CBU 98091

IP Addressing Parameters

When a new 171 CBU 98090 or 171 CBU 98091 processor is shipped from the factory, it does not come with pre-configured IP address settings. IP address settings include:

- IP address
- subnet mask
- default gateway

First Power-Up

When you first connect the processor to an Ethernet network and power it up, it transmits a request for IP address settings. The BOOTP request can be handled by either a BOOTP or a DHCP server.

If both of the following conditions exist, the server assigns the processor its IP address settings:

- A BOOTP or DHCP server exists on the network.
- The server is configured to recognize the processor by its MAC address.

NOTE: Consult with your system administrator to determine if a BOOTP or DHCP server exists on your network. Your system administrator can help you configure the server to maintain the processor IP address settings.

If no BOOTP or DHCP server exists on your network – or the server is not configured to deliver IP address settings to the processor – the processor assigns itself a default IP address.

Deriving a Default IP Address from a MAC Address

The processor derives its default IP address from its factory-assigned MAC address. The MAC address for the processor is displayed on the front of the module.

The default address is in the format 10.10.*x*.*y*, where *x* and *y* are derived from the last 2 octets of the MAC address.

To determine the default IP address of a module, follow these steps:

Step	Action	
1	Using a sample MAC address of 00-00-54-10-25-16, ignore the first 4 pairs (00-00-54-10).	
2	Convert the subsequent pairs (*25* and *16*) from hexadecimal to decimal format.	**25:** (2 x 16) + 5 = *37*
		16: (1 x 16) + 6 = *22*
3	Use the specified format (10.10.*x*.*y*.) to assemble the derived default IP address.	The default IP address is: 10.10.37.22

NOTE: There are many resources for converting hex numbers to decimal numbers. For example, you can use the Windows calculator in scientific mode.

Assigning New IP Address Settings

After first power-up, you can connect to the processor as follows:

- via Ethernet using the default IP address *(see page 36)*
- via USB using the fixed IP address 90.0.0.1
- via the Modbus serial port

After a connection has been established, you can use Unity Pro to transfer a configuration file to the processor, including new IP address settings.

NOTE: Configure IP parameters in Unity Pro *(see page 109)*, then transfer the configuration file to the CPU over the USB port *(see page 40)*.

Section 2.3
USB Port

Overview

This section describes the USB port included on the 171 CBU 78090, 171 CBU 98090 and 171 CBU 98091 processors.

What Is in This Section?

This section contains the following topics:

Topic	Page
171 CBU 78090, 171 CBU 98090 and 171 CBU 98091 USB Port Location	39
171 CBU 78090, 171 CBU 98090 and 171 CBU 98091 USB Port Features	40
171 CBU 78090, 171 CBU 98090 and 171 CBU 98091 USB Port Pin Assignment	42

171 CBU 78090, 171 CBU 98090 and 171 CBU 98091 USB Port Location

Physical Location

The 171 CBU 78090, 171 CBU 98090 and 171 CBU 98091 processors include a USB port.

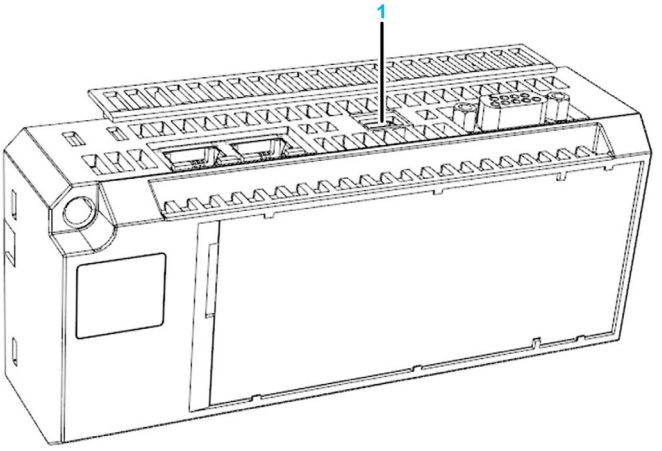

1 USB port

The USB port mini-B connector.

171 CBU 78090, 171 CBU 98090 and 171 CBU 98091 USB Port Features

Using the USB Port

Use the USB port as follows:

- to connect the processor to Unity Pro using the following connection settings:
  - Communication Selection: USB; Address: SYS, or
  - Communication Selection: TCP/IP; Address: 90.0.0.1
- to perform processor firmware upgrades, using the USB communication selection
- to access processor web pages at IP address 90.0.0.1

The USB port provides an electrically isolated interface, and serves as the default port for connecting a PC to the 171 CBU 78090, 171 CBU 98090 and 171 CBU 98091 processor. When you connect a PC to the processor USB port, the processor becomes a USB peripheral device and the PC acts as the USB host.

For communications between the PC and processor over the USB port:

- 90.0.0.1 is the fixed IP address of the processor.
- 90.0.0.2 is the IP address of the PC.

Use Unity Pro to perform:

- on-line application programming
- application debug
- the on-line commands: RUN, STOP, READ, and WRITE

Use Unity Loader to perform:

- application download
- application upload
- firmware upgrade

Although you can connect your PC to only one processor at a time over the USB port, you can create multiple connections between a processor and programs running on your PC. For example, you can use the USB port to connect simultaneously both an HMI application and Unity Pro to the processor.

USB Port Features

The USB port includes the following features:

Feature	Description
Application protocols supported	• RNDIS • Modbus • Umas • FTP • HTTP
Baud rate	12 Mbits/s (fixed)
Connector type	USB mini-B

Feature	Description
Max connections: Modbus TCP (port 502)	4 (only 1 can be used by Unity Pro)
Max connections: web (HTTP)	2
Max message length	1026 bytes (including message headers)
Max message throughput for Modbus TCP	This value is a function of the MAST cycle, and equals: (MAST cycle) x (4 requests/cycle) Application download rate: ● 20 K bytes/s for 1 connection ● 40 K bytes/s for 4 connections

171 CBU 78090, 171 CBU 98090 and 171 CBU 98091 USB Port Pin Assignment

Pin Assignment

The USB port uses a mini-B female connector.

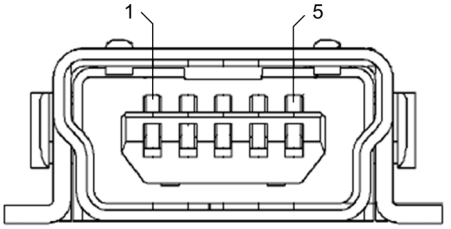

The USB signals assigned to each pin include:

USB mini-B Pin Number	Signal
1	VBUS (+5 V)
2	DM (Data –)
3	DP (Data +)
4	Not connected (slave)
5	GND (Signal ground)

USB Cables

Two connection cables are available to connect a PC or HMI to the processor USB port:

- BMX XCA USB 018, 1.8 m (5.91 ft) in length
- BMX XCA USB 045, 4.5 m (14.76 ft) in length

Both of these cables are equipped with a connector at each end:

- Type A USB: connects to the console
- Type mini B USB: connects to the processor

NOTE: It is recommended that you use a USB 2.0 shielded cable following the USB international standard. Both the BMX XCA USB 018 and BMX XCA USB 045 are shielded cables.

Section 2.4
I/O-Bus Port

Overview

This section describes the I/O-Bus port included on the 171 CBU 78090, 171 CBU 98090 and 171 CBU 98091 processors.

What Is in This Section?

This section contains the following topics:

Topic	Page
171 CBU 78090, 171 CBU 98090 and 171 CBU 98091 I/O-Bus Port Location	44
How I/O-Bus Works with Momentum Components	45
I/O-Bus Port Features	46
171 CBU 78090, 171 CBU 98090 and 171 CBU 98091 I/O-Bus Port Pin Assignment	47

171 CBU 78090, 171 CBU 98090 and 171 CBU 98091 I/O-Bus Port Location

Physical Location

The 171 CBU 78090, 171 CBU 98090 and 171 CBU 98091 processors include an I/O-Bus port. The port is located in the same relative position on the processor as on other Momentum processors. When you replace an existing processor with a 171 CBU 78090, 171 CBU 98090 or 171 CBU 98091 processor, you can reconnect to I/O-Bus devices without having to modify the existing I/O-Bus cabling.

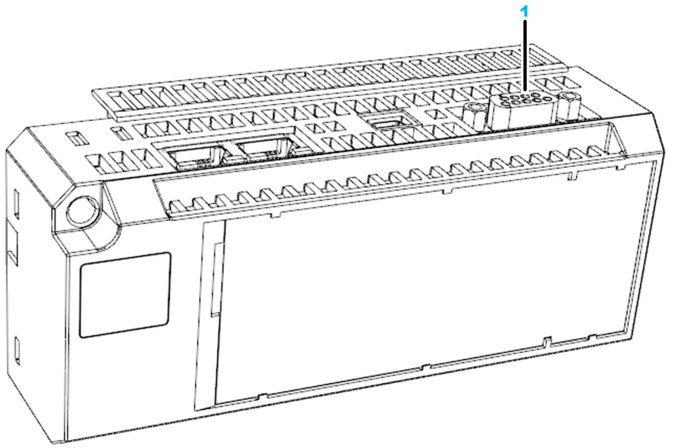

1 I/O-Bus port

The I/O-Bus port DB9 female connector.

How I/O-Bus Works with Momentum Components

How Signals Are Passed

I/O-Bus operates with the master passing signals over a remote bus cable to each slave device in series. The slaves return signals to the master over the same cable.

How Data Is Transferred

The I/O-Bus functions as a logical shift register. The entire data stream of the application, originating at the master, is transferred serially from slave to slave down the remote bus. Each slave regenerates the entire stream before passing it to the next slave in the ring. As a slave handles the stream data, it extracts the portion that is assigned to it and adds any output data to the stream.

Transmission Speed

Data is transmitted at the baud rate of 500 kbits/s.

Amount of Data

The 171 CBU 78090, 171 CBU 98090 and 171 CBU 98091 processors support the following number of 16-bit words in the data stream:

Word type	Maximum number
Input words	256
Output words	256

I/O-Bus Port Features

Using the I/O-Bus Port

The 171 CBU 78090, 171 CBU 98090 and 171 CBU 98091 processors act as the I/O bus master for up to 32 I/O slave modules. The I/O modules on the bus can have addresses from 1 to 32. The I/O module connected to the processor I/O bus port has bus address number 1.

I/O-Bus Port Features

The I/O-Bus port includes the following features:

Feature	Description
Protocol	Interbus
Baud rate	500 Kbits/s
Media	24 AWG, stranded (7x32), 3 twisted pairs, insulated cable with tinned copper (TC) conductors
Connector type	DB9 female
Data integrity test	CRC-16
Addressing	Physical location
Mode of operation	Master–continuous shift register
Topology	Ring–extensible 1 level using a 170 BNO 6X1 XX branch interface module

NOTE: On the transition from RUN to STOP states, the processors apply the fallback setting to I/O modules – on the local or the I/O-Bus – that support this feature.

I/O-Bus Port Diagnostics

Use the I/O LED on the processor *(see page 145)* to help diagnose the state of the processor.

171 CBU 78090, 171 CBU 98090 and 171 CBU 98091 I/O-Bus Port Pin Assignment

Pin Assignment

The I/O-Bus port uses a DB9 female connector.

The I/O-Bus signals assigned to each pin include:

I/O-Bus Pin Number	Wire Color	Signal
1	Yellow	DO (Data out)
2	Gray	DI (Data in)
3	Brown	Common
4	–	Not connected
5	–	Not connected
6	Green	DO_N (Data out negated)
7	Pink	DI_N (Data in negated)
8	–	Not connected
9	–	Not connected

Low Profile Cables

For side-by-side mounting of the processor with I/O modules on a DIN rail or wall, Modicon provides two specially molded low profile cables.

Part Number	Length
170 MCI 007 00	11.4 cm (4.5 in)
170 MCI 100 01	100 cm (39 in)

These cables have a male 9-in D-shell connector on one end and a female 9-pin D-shell on the other. The male connector plugs into the female I/O-Bus port on the processor, and the female connector plugs into the male connector on the left side of a 170 INT 110 00 Interbus communications adapter on an I/O base. Additional cables can then be used to connect a series of I/O modules via their I/O-Bus communication ports.

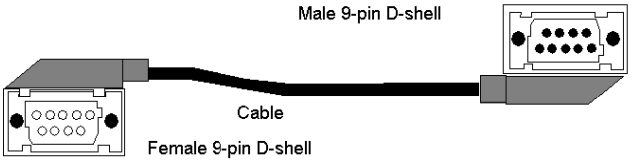

I/O-Bus Cable Connector Kit

I/O-Bus communicates over full duplex cable. For custom cable lengths, Schneider Electric offers a cable connector kit (part number 170 XTS 009 00). The kit includes two connectors, one male and one female, that can be soldered to a full duplex cable of the appropriate length.

The recommended cable is Belden 8103 or equivalent.

NOTE: The connectors in the 170 XTS 009 00 kit are high profile.

Chapter 3
Installing the 171 CBU 78090, 171 CBU 98090 and 171 CBU 98091 Processors

Overview

This chapter shows you how to assemble, label, mount, ground, and disassemble the 171 CBU 78090, 171 CBU 98090 and 171 CBU 98091 processors.

What Is in This Chapter?

This chapter contains the following topics:

Topic	Page
Assembling the Processor	50
Mounting the 171 CBU 78090, 171 CBU 98090 and 171 CBU 98091 Processors	56
Establishing an Electrical Ground for the 171 CBU 78090, 171 CBU 98090 and 171 CBU 98091 Processors	58
Disassembling a Momentum Processor from an I/O Base	59

Assembling the Processor

Overview

The 171 CBU 78090, 171 CBU 98090 and 171 CBU 98091 processors reside on top of a Momentum I/O base. Both processors are designed to fit on any Momentum I/O base.

You can snap a processor directly onto a Momentum I/O base, making connections at the following points:

- 2 plastic locking tab extensions on the processor fit into the slots on the left and right sides of the I/O base.
- a 12-pin female power and communication connector on the processor fits into the 12-pin male connector on the base.
- 4 snap connectors on the top of the processor and 2 snap connectors on the bottom of the processor fit into receptacles on the base.

For an /O base with a fixed standoff ground-nut on its printed circuit board, a ground screw and a male-female standoff connect the processor to the I/O base.

NOTE: For a list of I/O bases that include a fixed standoff ground-nut that can accept a ground screw and male-female standoff, refer to the list of supported Momentum I/O bases *(see page 181)*.

The connection points on the back side of the processor:

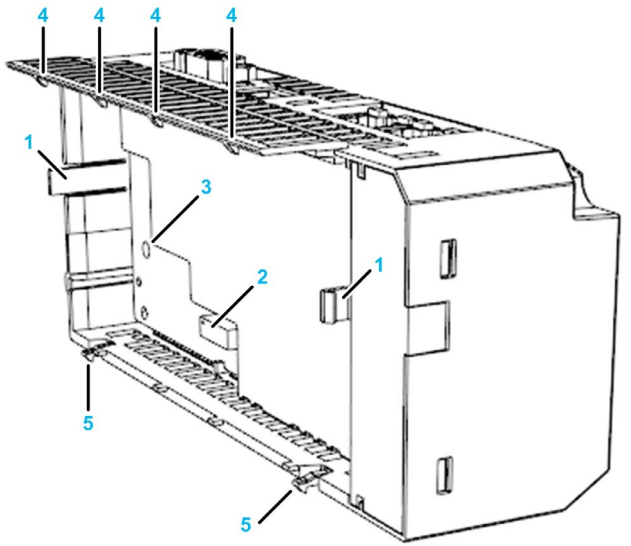

1 locking tabs
2 12-pin female power and communications connector
3 aperture for male-female standoff and ground screw
4 snap connectors on top of processor
5 snap connectors on bottom of processor

The connection points on the I/O base:

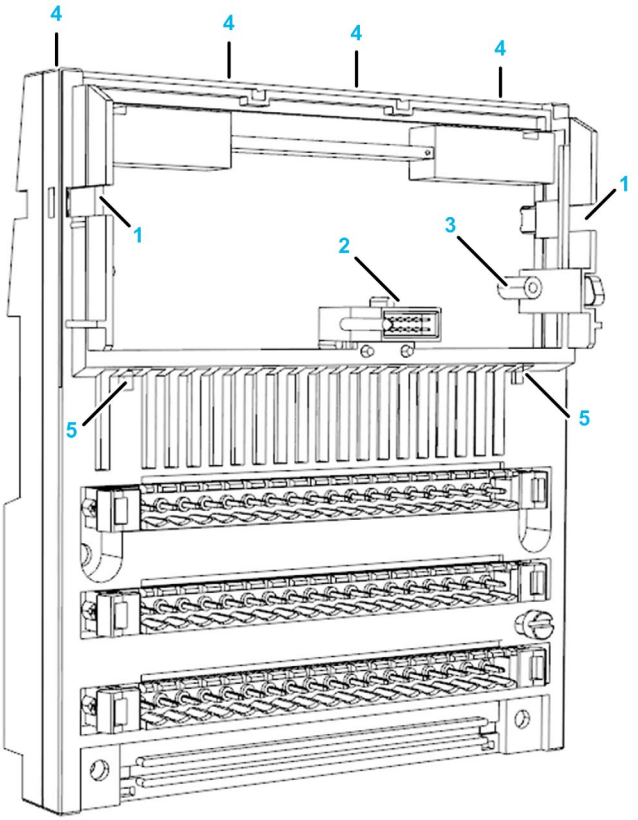

1 locking tab receptacles
2 12-pin male power and communications connector
3 fixed standoff ground nut (not provided on some I/O bases)
4 snap connector receptacles that connect to top of processor (on the back of the I/O base)
5 snap connector receptacles that connect to bottom of processor

NOTE:

- You can use the Schneider Electric high vibration assembly kit *(see page 176)* (170 XTS 120 00) to help stabilize the processors in a high vibration environment.
- The 171 CBU 78090, 171 CBU 98090 and 171 CBU 98091 processors do not support the use of option adapters.

Required Tools

The only tool required to install the ground screw is a PZ 2 Phillips head screwdriver. The recommended maximum torque on the ground screw is 0.5 Nm (4.4 in/lb).

Installation

Electrical circuitry on the I/O base may be exposed when a Momentum processor or other adapter is not mounted.

⚠ ⚠ DANGER

ELECTRICAL SHOCK HAZARD

- Turn off power to the I/O base whenever a processor or other adapter is not mounted on the I/O base.
- Do not insert the power wiring connectors to the I/O base until after a processor or other adapter has been mounted on the I/O base.

Failure to follow these instructions will result in death or serious injury.

Attaching or detaching a Momentum processor with connected communication cables can expose remote electrical ground current.

⚠ ⚠ DANGER

ELECTRICAL SHOCK HAZARD

Disconnect the I/O Bus, Ethernet, and serial cabling before attaching or detaching a processor.

Failure to follow these instructions will result in death or serious injury.

Confirm that the standoff does not touch the electrical components on the processor.

⚠ CAUTION

RISK OF IMPROPER GROUNDING

When using an I/O module with a fixed standoff-ground nut assembly together with another module without this ground screw feature, do not install the standoff into the fixed standoff-ground nut on the I/O module.

Failure to follow these instructions can result in injury or equipment damage.

The electrical components of the processor can be damaged by static electricity.

⚠ CAUTION

RISK OF ELECTROSTATIC DISCHARGE

- Use proper electrical static discharge (ESD) procedures when handling the processor.
- Do not touch the internal electrical components of the processor.

Failure to follow these instructions can result in injury or equipment damage.

If the **Automatic start in Run** parameter is enabled, the processor begins to operate when power is cycled.

⚠ CAUTION

UNINTENDED EQUIPMENT OPERATION

- Disconnect any outputs before installing the processor.
- Confirm that the **Automatic start in Run** parameter setting is de-selected before re-connecting the outputs.

Failure to follow these instructions can result in injury or equipment damage.

The following diagram indicates the process for assembling the processor and I/O base:

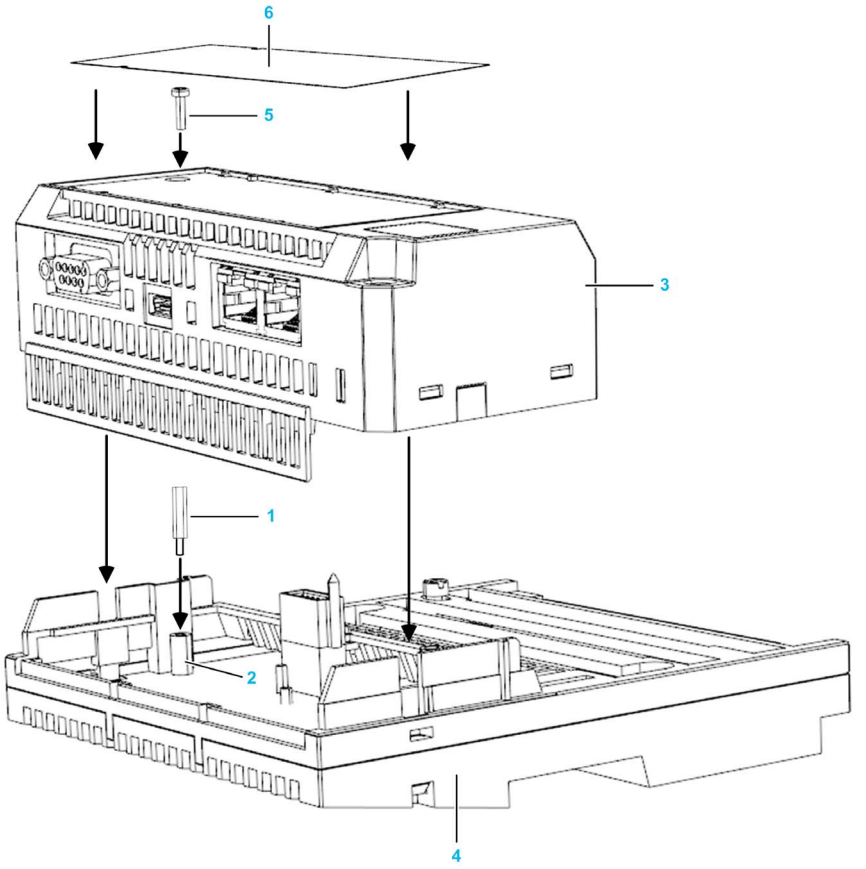

To install the ground screw, follow these steps:

Step	Action
1	Select a clean environment for the assembly of the components.
2	Remove the power connectors from the I/O base.
3	If the I/O base includes outputs, disconnect the outputs.
4	Disconnect I/O Bus, Ethernet, and serial cables.
5	Install the male-female standoff (1) into the threaded fixed standoff ground-nut assembly (2), located on the I/O module printed circuit board. **NOTE:** The male-female standoff is part number 35004788; the fixed standoff ground nut assembly is part number 35001482.

Step	Action
6	Snap the processor (3) onto the I/O base (4), gently pressing the locking tabs inward. The locking tabs on each side of the adapter slide inside the I/O base and out through the locking slot. The 12-pin connectors on the 2 units are mated to each other in the process.
7	Use a PZ 2 Phillips head screwdriver to install the standard M3-6 ground screw (5) through the top of the processor. The recommended torque on the ground screw is 0.5 Nm (4.4 in/lb). **NOTE:** The ground screw is part number V10VC710306.
8	Insert the label (6) on the front of the processor, sliding the edges of the label under the tabs that hold the label in place.

Mounting the 171 CBU 78090, 171 CBU 98090 and 171 CBU 98091 Processors

Guidelines

The 171 CBU 78090, 171 CBU 98090 and 171 CBU 98091 processor and I/O base assembly can be mounted either on a DIN rail or on a panel. The processors are designed as open equipment per IEC 1131-2, 1.4.20. Install open equipment in industry-standard enclosures, and restrict access to authorized personnel.

Mounting on a DIN Rail

The numbers in the following illustration refer to the steps in the procedure below.

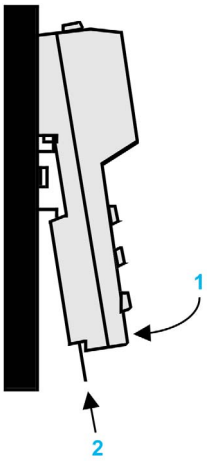

The processor assemblies are mounted on a DIN rail in the same manner as other TSX Momentum assembles, as follows:

Step	Action
1	Hook the plastic tabs on the back of the device onto the DIN rail and swing the module down to rest against the rail.
2	Push the locking tab upward to hold the device in place.

Mounting on a Panel

To mount the processor assemblies on a panel or wall, you need to obtain 2 mounting screws for each unit. The body of the screws should be 4 mm (0.16 in) in diameter and at least 25 mm (0.97 in.) long. Confirm that the head of the screw does not exceed 8 mm (0.31 in) in diameter.

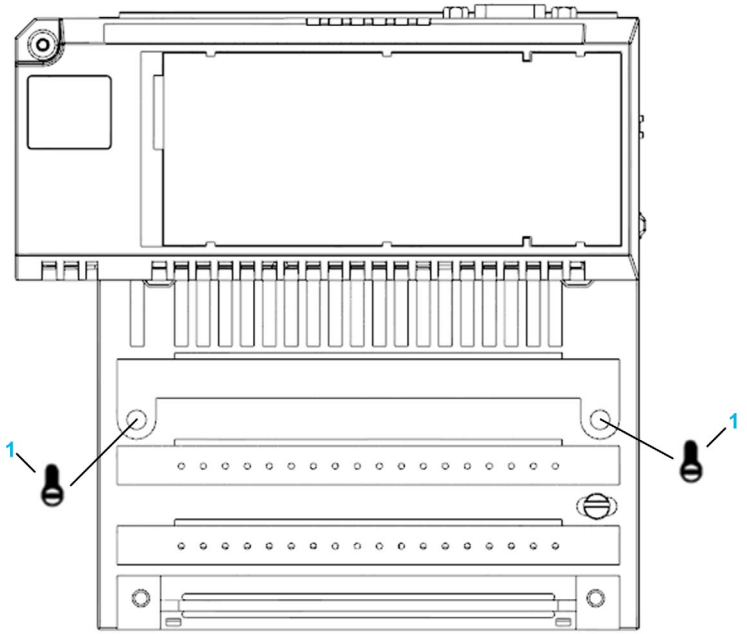

1 4 x 25 mm (0.16 x 0.99 in.) mounting screw

Establishing an Electrical Ground for the 171 CBU 78090, 171 CBU 98090 and 171 CBU 98091 Processors

Establishing Grounding Connections with the I/O Base

Electrical ground connections for the processors are created with the I/O base on which the processor is mounted. Electrical ground connections are established during the assembly process, as follows:

- When you snap together the I/O base and the processor, an electrical ground connection is established by touching the ground contact spring on the I/O base to the ground contact plate on the processor.

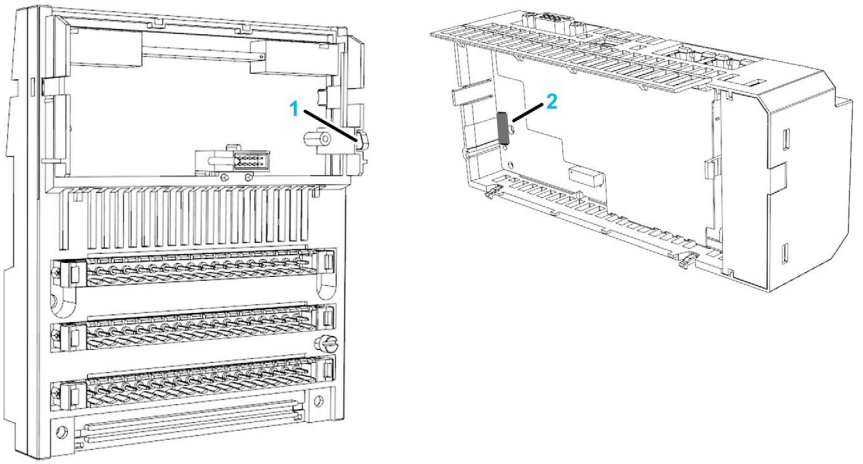

1 ground contact spring on I/O base
2 ground contact plate on the processor

- For an I/O base unit with a fixed ground nut, an electrical ground connection is established when you perform the following tasks:
  - Insert the male-female standoff into the fixed ground nut on the I/O base.
  - Connect a ground screw to the standoff through the top of the processor.

  Refer to the assembly topic for instructions on how to install the male-female standoff and ground screw *(see page 52)*.
  NOTE: A ground screw and male-female standoff can be used only with I/O base modules that include the fixed ground nut.

NOTE: To complete your grounding connections, establish both a protective ground (PE) and a functional ground (FE) for the I/O base. For a detailed description of grounding considerations for Momentum I/O base units, refer to the *Modicon Momentum I/O Base User Guide*.

Disassembling a Momentum Processor from an I/O Base

Tools

Use 2 screwdrivers:

- a PZ 2 Phillips head screwdriver to remove the ground screw.
- a flat-head screw driver to disengage locking tabs.

Removing an Adapter from an I/O Base

Electrical circuitry on the I/O base may be exposed when a Momentum processor or other adapter is not mounted.

⚠⚠ DANGER

ELECTRIC SHOCK HAZARD

- Turn off power to the I/O base whenever a processor or other adapter is not mounted on the I/O base.
- Do not insert the power wiring connectors to the I/O base until after a processor or other adapter has been mounted on the I/O base.

Failure to follow these instructions will result in death or serious injury.

To disassemble the processor and I/O base, follow these steps:

Step	Action
1	Work in a clean environment when you disassemble the processor and I/O base assembly.
2	Remove power from the I/O base by removing the terminal connectors.
3	Remove the assembled unit from its DIN rail or panel mounting surface.
4	If the I/O base includes a fixed standoff ground nut, remove the label on the front of the processor. Removing the label exposes the ground screw aperture located on the right front of the processor. **NOTE:** This step applies only to assemblies with an I/O base that includes a standoff ground nut on its printed circuit board.
5	Use a PZ 2 phillips head screwdriver to remove the grounding screw. **NOTE:** This step applies only to assemblies with an I/O base that includes a standoff ground nut on its printed circuit board.

Step	Action
6	Use the flat-head screwdriver to push in and disconnect the single locking tab on the right side of the module (1), and the 4 locking tabs on the top of the module (2): 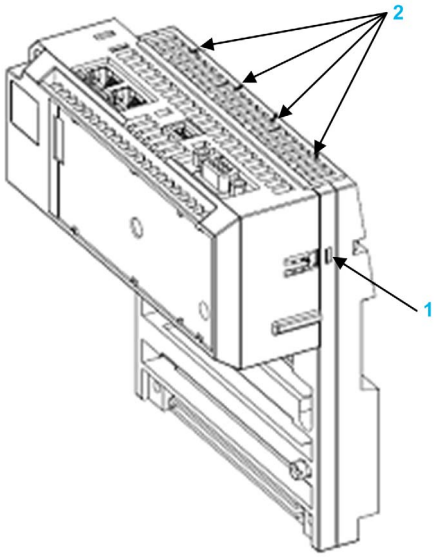

Step	Action
7	After the locking tabs have been disengaged, use the flat-head screwdriver to release the 2 stabilizing snaps (3 and 4) on the bottom of the processor: 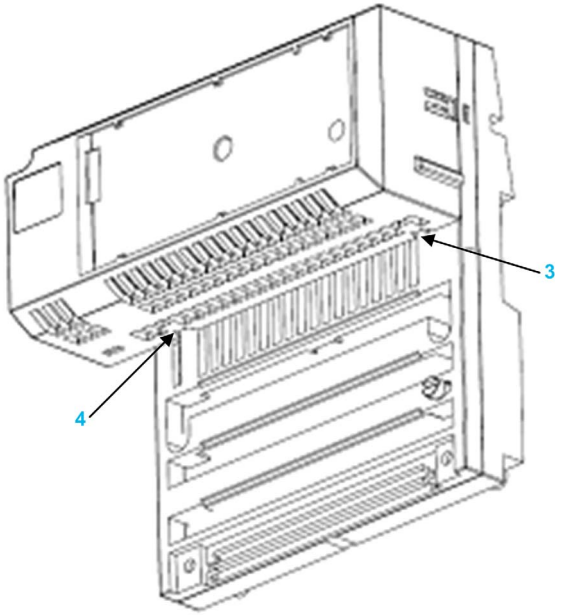

Step	Action
8	To remove the processor from the I/O base, rotate the side of the processor, which was previously detached in step 6, up and away from the base in a circular motion (5). Then push the processor in the indicated direction (6) to disengage it from the processor: 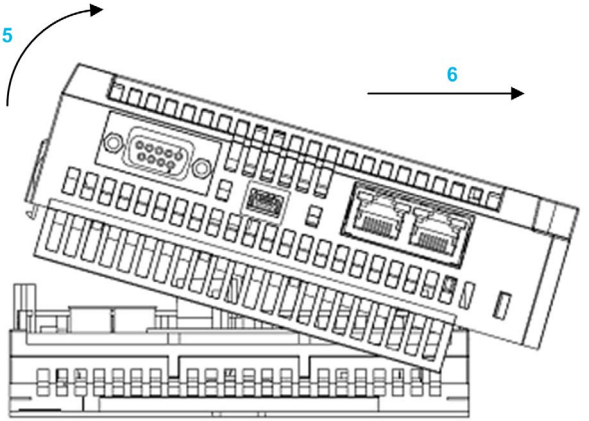

Chapter 4
Configuring the 1171 CBU 78090, 171 CBU 98090 and 171 CBU 98091 Processors in Unity Pro

Overview

This chapter describes how to configure the 171 CBU 78090, 171 CBU 98090 and 171 CBU 98091 processors using Unity Pro configuration software.

What Is in This Chapter?

This chapter contains the following sections:

Section	Topic	Page
4.1	Creating a New Momentum Project in Unity Pro	64
4.2	Configuring the CPU in Unity Pro	67
4.3	Configuring Serial Communication for the 171 CBU 78090, 171 CBU 98090 and 171 CBU 98091 Processors in Unity Pro	74
4.4	Creating the I/O-Bus	82
4.5	Configuring the Ethernet Port in Unity Pro	102
4.6	Configuring Ethernet Services	107
4.7	Programming In Unity Pro	129
4.8	Momentum-Specific System Words	131

Section 4.1
Creating a New Momentum Project in Unity Pro

Creating a New Momentum Project in Unity Pro

Introduction

To create a new Momentum project in Unity Pro, you need to specify:

- the Momentum CPU
- the I/O base

You may optionally apply configuration settings saved to an .XSO file.

Creating and Saving a New Momentum Project in Unity Pro

The following steps describe the creation of a project:

Step	Action
1	Open Unity Pro.
2	In the Unity Pro main menu, select **File** →**New...**. The **New Project** window opens displaying a list of Schneider Electric controller types

Step	Action
	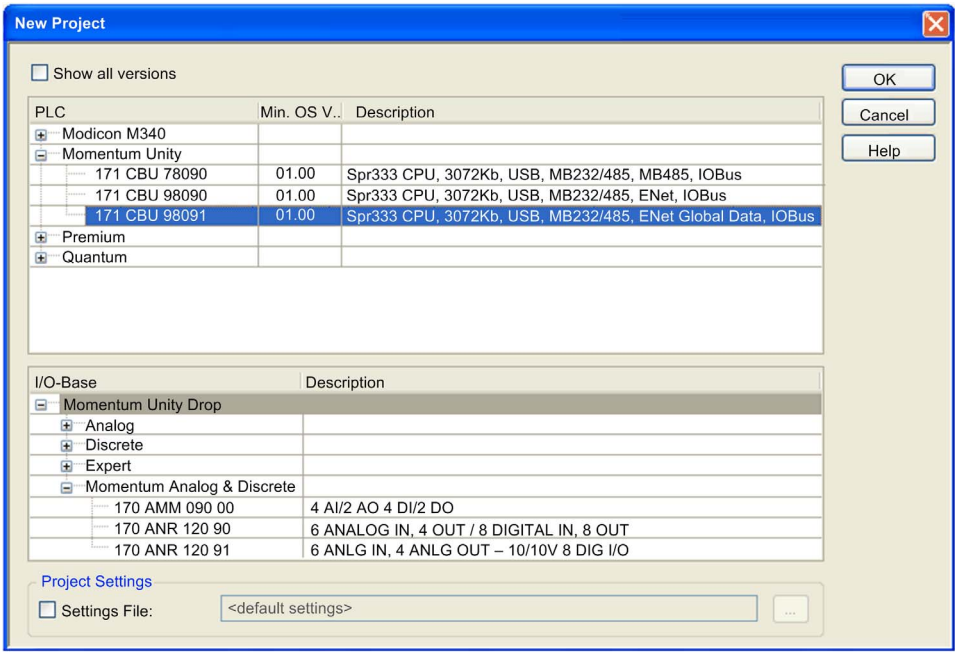

3	In the **PLC** list at the top of the **New Project** window, expand the **Momentum Unity** node and select a CPU.
4	In the **I/O-Base** list in the **New Project** window, expand the **Momentum Unity Drop** node and select an I/O base.
5	(Optional) To create a project using previously saved project settings select **Settings File**, then click the ellipsis button to navigate to and select a saved project settings file with an .XSO file extension.

Step	Action
6	Click **OK**. Unity Pro displays the **Project Browser**, below. 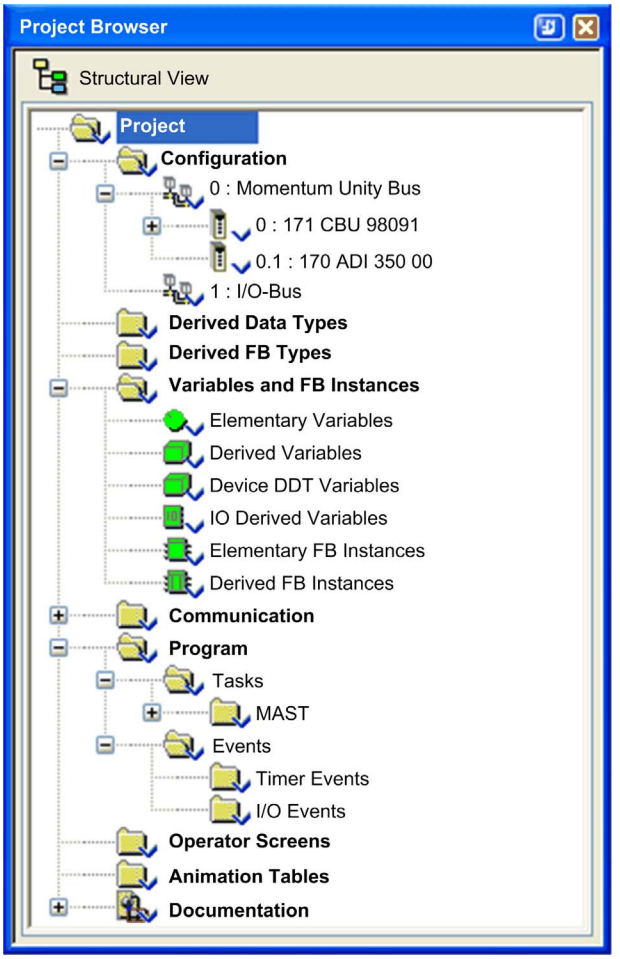
7	To save the project, select **File** →**Save**. The **Save As** dialog opens.
8	In the **Save As** dialog, type in a **File name** – which will be the name of your Unity Pro project – then click **Save**. Unity Pro saves your project to the specified path location.

Section 4.2
Configuring the CPU in Unity Pro

Overview

This section shows you how to configure the CPU and use the **State RAM Viewer**.

What Is in This Section?

This section contains the following topics:

Topic	Page
Configuring the 171 CBU 78090, 171 CBU 98090 and 171 CBU 98091 Processors	68
Using the State RAM Viewer	72

Configuring the 171 CBU 78090, 171 CBU 98090 and 171 CBU 98091 Processors

Introduction

Use the CPU **Configuration** tab to:

- configure CPU start-up options
- specify the size for different types of memory allocations
- click the **Viewer** button to open the State RAM Viewer *(see page 72)*

Accessing the Configuration Screen

Open the CPU configuration screen as follows:

Step	Action
1	In the **Project Browser**, expand the **Configuration** and **Momentum Unity Bus** nodes, and select the CPU processor (in this example, the 171 CBU 98091 processor): 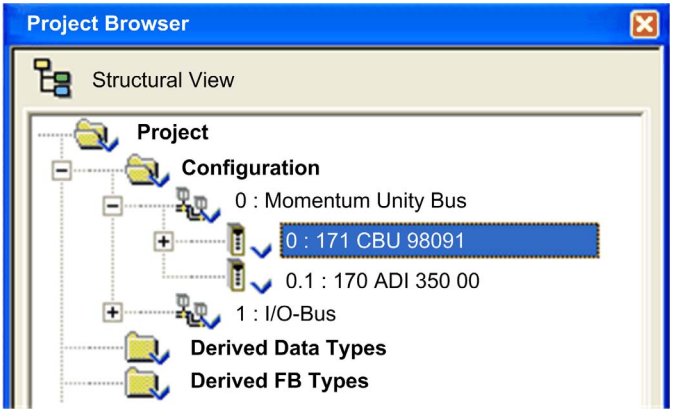
2	Using the contextual menu, select **Open**. The CPU properties dialog opens.
3	Select the **Configuration** tab.

Configuring the Processor

NOTE: You can modify the parameters of this dialog box only in offline mode.

Configuration screen for CPU operation and memory management:

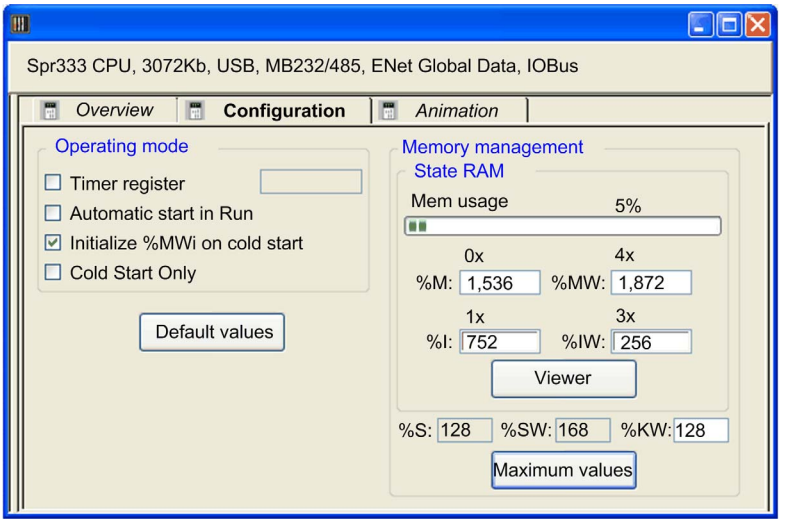

The CPU includes the following settings:

Setting	Description
Operating mode area	
Timer Register	The location of a %MW register to hold the value of a free running counter. The counter is incremented every 10ms while the CPU is in Run mode. The value is not incremented when the CPU is in Stop mode. Default = de-selected.
Automatic start in Run	Select this to force the CPU to enter RUN mode in the event of a cold start. Default = de-selected.
Initialize %MWi on cold start	• Selected (default): Indicates %MW are handled like other global variables (initialized to the initial values stored in the initial value arrays). • De-selected: Indicates %MW are initialized with the value 0.
Cold Start Only	Select this to force the cold start of the application, instead of the normal warm start. Default = de-selected.
Memory management - State RAM area	
Memory usage	The bar graph indicates the percentage of memory in use.
%M	Memory bits configurable memory size: • default size: 1,536 bytes • maximum size: 8192 bytes
%I	Input bits configurable memory size: • default size: 752 bytes • maximum size: 8192 bytes

Setting	Description
%IW	Input words configurable memory size: ● default size: 256 bytes ● maximum size: 26,048 bytes
%MW	Memory words configurable memory size: ● default size: 1,872 bytes ● maximum size: 26,048 bytes
%S	System bits size (non-configurable): 128 bytes
%SW	System words size (non-configurable): 168 bytes
%KW	Constant words configurable memory size: ● default size: 128 bytes ● maximum size: 26,048 bytes

Setting Default and Maximum Values

You can reset the CPU configuration properties to:

- **default** values
- **maximum** values

The value editing window for default values and for maximum values are similar in appearance. One lists the default value for each configurable property, the other lists maximum values for each configurable property. The **Default Values** window:

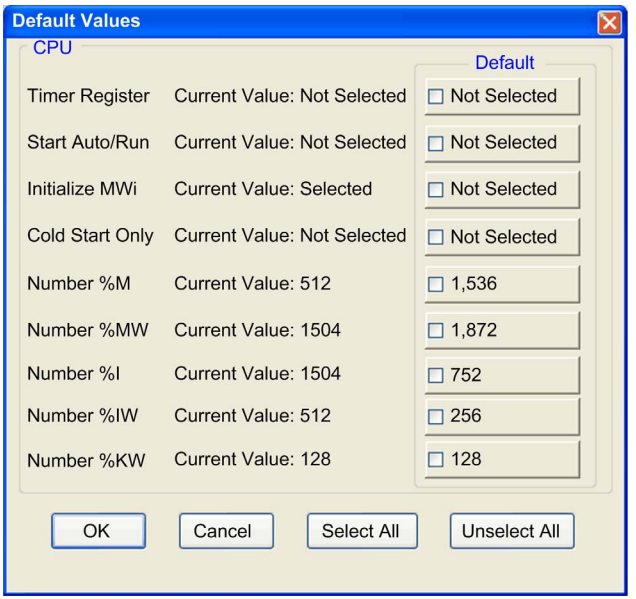

To reset CPU configuration parameters, follow these steps:

Step	Action
1	Click one of the following command buttons on the **Configuration** tab: ● **Default values** to reset parameters to their default values ● **Maximum values** to set parameters to their maximum values Depending on the button you push, a window opens displaying the default or maximum values for each parameter.
2	In the **Default values** / **Maximum values** window, place a check mark next to each setting you want to set to either its default of maximum value. **NOTE:** You can manually place a check mark next to one parameter at a time, or click **Select All** to select all parameters at once.
3	Click **OK** to edit the selected parameter values.

Using the State RAM Viewer

State RAM Memory Viewer

The following screen displays the content of the state RAM memory areas of the Momentum processor:

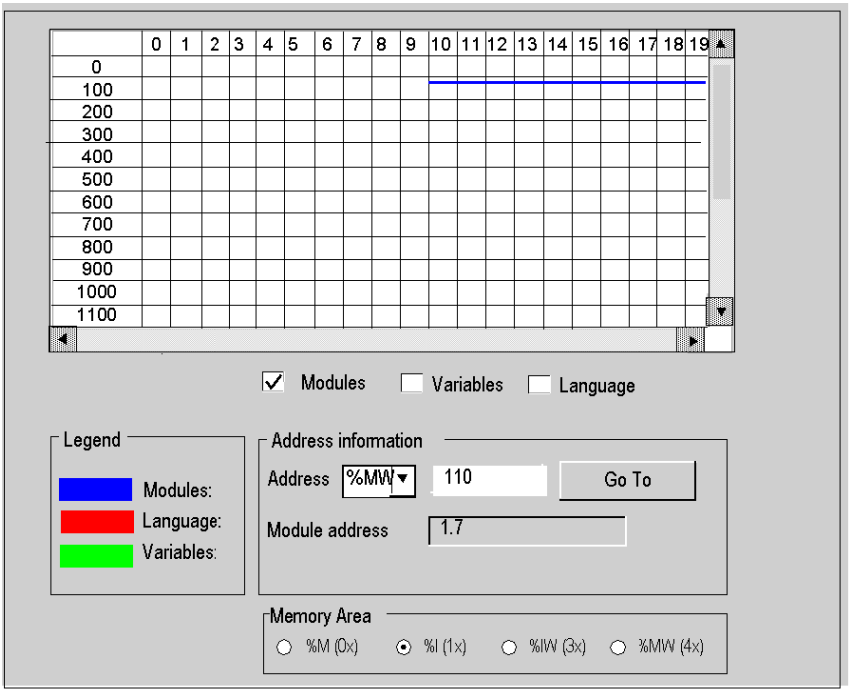

NOTE:

The state RAM viewer is directly accessible via the Unity Pro main menu at:

- **PLC →State Ram Viewer**

Description of the screen zones

Zone	Description
Table	This table represents the mapping of the memory area selected with the **Memory Area** selection buttons. The occupied memory addresses are marked by dashes: ● blue: for module type objects ● red: for objects entered in the program ● green: for objects defined in the variable editor The scroll bars can be used to access the entire memory area.

Zone	Description
Modules, **Variables**, and **Language** check-boxes	These check-boxes are used to filter the information displayed in the table. If for example, **Modules** is the only checkbox that is selected, only module-type information is displayed.
Address information	By entering the object and its address in the **Address** fields and clicking the **Go To** button, you display directly the address in the table (without using the scroll bars). This zone also has a display function; it displays the object and address of the box selected in the table. For module-type objects, it also gives the topological address of the module concerned.
Memory Area selection buttons	These buttons are used to select the memory area to display in the table: ● **%M (0x)** output bits and internal bits ● **%I (1x)** input bits ● **%IW (3x)** input words ● **%MW (4x)** output words and internal words

Section 4.3

Configuring Serial Communication for the 171 CBU 78090, 171 CBU 98090 and 171 CBU 98091 Processors in Unity Pro

Overview

This section describes how to configure the 171 CBU 78090 171 CBU 98090 and 171 CBU 98091 processor for serial communication in Unity Pro.

What Is in This Section?

This section contains the following topics:

Topic	Page
Accessing Serial Link Parameters in Unity Pro	75
Serial Link Parameters and Settings in Unity Pro	77

Accessing Serial Link Parameters in Unity Pro

Configuring the Processor as a Modbus Slave

The following steps show you how to access the serial port configuration screen for the 171 CBU 78090, 171 CBU 98090 and 171 CBU 98091 processors in Unity Pro. Use the Unity Pro configuration screens to configure a processor for serial link operation in Modbus slave mode.

NOTE: You can use `L9_XMIT` or `XXMIT` function blocks to configure a serial link to operate in either Modbus master mode or character mode.

NOTE: During run-time, these function blocks overwrite the serial port configuration settings in Unity Pro. After these function blocks have finished executing, the serial link retains the settings written to the serial port by these function blocks. To restore the original serial port settings, cycle power to the processor or download the original configuration to the processor.

Accessing the Serial Link

To access the serial link, follow these steps:

Step	Action
1	In the project browser, navigate to and open **Project** →**Configuration** → **Momentum Unity Bus** →**<Processor>**: 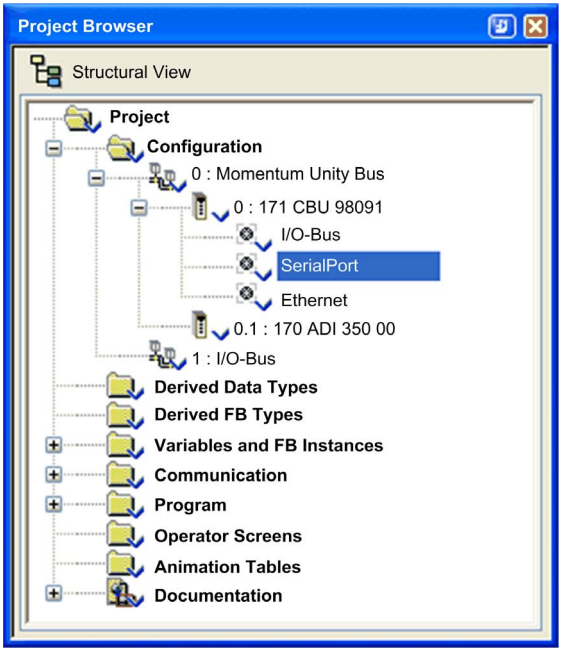

Step	Action
2	Double-click the **Serial Port** node to open the **Configuration** screen:

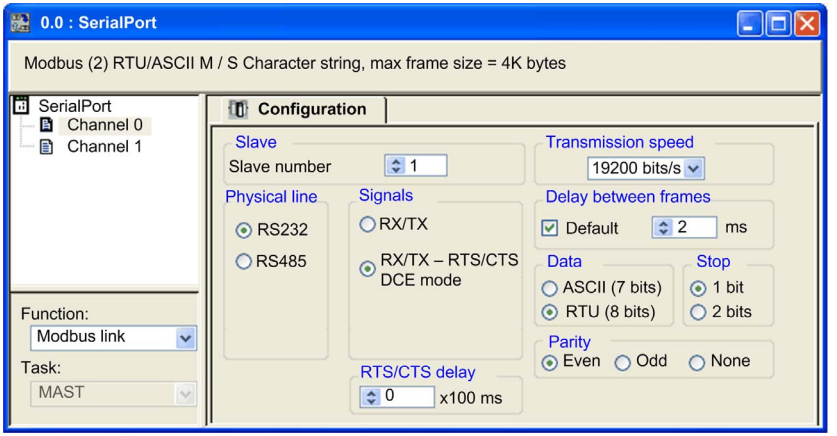

NOTE:

- The 171 CBU 78090 configurable RS232/RS485 serial port uses Channel 0.
- The RS485 fixed serial port uses at Channel 1.

Serial Link Parameters and Settings in Unity Pro

Configuring Modbus Slave Settings

Use Unity Pro to configure serial ports on the 171 CBU 78090, 171 CBU 98090 and 171 CBU 98091 processors as Modbus slaves. The range of available settings depend on the port you are configuring:

- the configurable RS232/RS485 serial port on the 171 CBU 78090, 171 CBU 98090 and 171 CBU 98091 processors, which operates at channel 0
- the fixed RS485 serial port on the 171 CBU 78090 processor, which operates at channel 1

Serial Link Parameters

The following parameters can be configured in Unity Pro for operation of the serial link in Modbus slave mode:

Parameter	Fixed RS232 Port 171 CBU 78090	Configurable RS232/RS485 Port 171 CBU 98090 & 171 CBU 98091
Operation Mode	Modbus (fixed)	Modbus (fixed)
Modbus type	Slave (fixed)	Slave (fixed)
Slave number *(see page 78)*	1...247, 248; default = 1	1...247, 248; default = 1
Physical line *(see page 78)*	RS485 (fixed)	• RS232 (default) • RS485

Signals *(see page 79)*	RX/TX (fixed)	• If RS232 is selected:
		  • RX/TX (default)
		  • RX/TX + RTS/CTS DCE mode
		• If RS485 is selected:
		  • RX/TX (fixed)

RTS/CTS delay (ms) *(see page 79)*	–	If RS232 and RX/TX + RTS/CTS DCE mode are selected: • 0...10,000 ms in 100 ms increments default = 0
Transmission speed (bits/s) *(see page 80)*	• 300 • 600 • 1200 • 2400 • 9600 (default) • 19,200	• 300 • 600 • 1200 • 2400 • 9600 (default) • 19,200
Delay between frames (ms) *(see page 80)*	2...10,000 ms in 1 ms increments; default = 2 ms	2...10,000 ms in 1 ms increments; default = 2 ms
Data *(see page 80)*	• ASCII (7 bits) • RTU (8 bits) (default)	• ASCII (7 bits) • RTU (8 bits) (default)

Parameter	Fixed RS232 Port 171 CBU 78090	Configurable RS232/RS485 Port 171 CBU 98090 & 171 CBU 98091
Stop *(see page 81)*	• 1 bit (default) • 2 bits	• 1 bit (default) • 2 bits
Parity *(see page 81)*	• Even (default) • Odd • None	• Even (default) • Odd • None

Slave Number

Use this parameter to input the processor slave number (or address):

Values include physical addresses 1 to 247, and 248 indicating Modbus slave point-to-point serial communication. Default = 1.

Physical Line

Use this parameter to select the physical line:

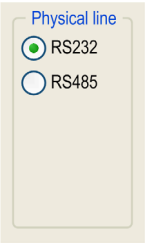

You can choose between 2 types of physical lines for the configurable serial port at port 2 on the processor:

- RS232
- RS485

NOTE: This setting is not editable for the fixed RS485 serial port on the 171 CBU 78090 processor.

Signals

Use this parameter to select the signal used by the physical line:

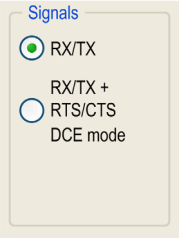

For RS232 communication, selections include:

- RX/TX (default)
- RX/TX + RTS/CTS DCE mode (typically selected when the processor is connected to a modem or bridge)

If the RS485 is configured, the entire zone will be grayed out and the default value is RX/TX.

RTS/CTS Delay

This configuration parameter provides for a delay after a clear to send (CTS) frame has been received in response to a prior request to send (RTS) frame.

Configure this parameter by inputting a value into the screen element, below:

RTS/CTS delay zone is enabled only when both RS232 and RX/TX+RTS/CTS DCE mode are selected. An RTS/CTS flow control algorithm is selected if the default value is 0 ms. A value different from 0 enables an RTS/CTS modem control algorithm.

The RTS/CTS flow control algorithm (DTE <-> DTE) is different from the RTS/CTS modem control algorithm (DTE <-> DCE) as follows:

- The RTS/CTS flow control algorithm is related to the overflow reception buffer (full-duplex).
- The RTS/CTS modem control algorithm deals with the shared transmission process, for example, a radio modem.

These algorithms are used for the following purposes:

Algorithm	Description
RTS/CTS Flow Control	The purpose of this algorithm is to help avoid a reception buffer overflow. The RTS output signal of each device is connected to CTS input signal of other device. The transmitter is authorized to transmit data when receiving the RTS input signal on its CTS input. This algorithm is symmetric and allows full-duplex asynchronous communication.

Algorithm	Description
RTS/CTS Modem Control	Before a request is transmitted, the sender activates the RTS signal and waits for the CTS signal to be triggered by the modem. If the CTS is not activated after the RTS/CTS delay, the request is discarded.

Transmission Speed

Use this parameter to select the transmission speed of the Modbus serial link:

Select a speed that is consistent with the other devices on the bus. The configurable values include 300, 600, 1200, 2400, 4800, 9600 (default), and 19200 bits per second.

Delay Between Frames

Use this parameter to set the minimum time separating two frames on reception:

The specified delay is added when the PLC is receiving messages. This is mainly used in RTU mode to extend the end of message frame timeout when using unbuffered modems or other devices that may add delays to the data transmission. Select **Default** to apply the default value.

NOTE: The default value depends on the selected transmission speed.

NOTE: Select the default value to be Modbus compliant. Configure the value so that it is the same for the master and all slaves on the bus.

Data

Use this parameter to enter the type of coding used to communicate over the Modbus serial link:

Set this field so that it is the same as the other devices connected on the bus. There are two settings:

- RTU mode (default):
  - The characters are coded over 8 bits.
  - The end of the frame is detected when there is a silence of at least 3.5 characters.
  - The integrity of the frame is checked using a word known as the CRC checksum, which is contained within the frame.

- ASCII mode:
  - The characters are coded over 7 bits.
  - The beginning of the frame is detected when the "**:**" character is received.
  - The end of the frame is detected by a carriage return and a line feed.
  - The integrity of the frame is checked using a byte called the LRC checksum, which is contained within the frame.

Stop

Use this parameter to enter the number of stop bits used for communication:

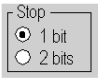

Set this field so that it is the same as the other devices on the bus. The configurable values include:
- 1 bit (default)
- 2 bits

Parity

Use this parameter to determine whether a parity bit is added or not, as well as its type:

Set this field so that it is the same as the other devices on the bus. The configurable values are:
- Even (default)
- Odd
- None

Section 4.4
Creating the I/O-Bus

Overview

This section describes how to create an I/O-Bus in Unity Pro.

What Is in This Section?

This section contains the following topics:

Topic	Page
Creating the I/O-Bus in Unity Pro	83
Addressing on the I/O-Bus	89
Configuring Momentum Analog I/O Modules	92
Configuring Discrete Momentum I/O Modules	93
Configuring the I/O Base: Memory Tab	95
Configuring Channels on the 170 AEC 920 00 Counter Module	98

Creating the I/O-Bus in Unity Pro

Introduction

The 171 CBU 78090, 171 CBU 98091 and 171 CBU 98091 processors support an I/O-Bus containing up to 32 Momentum devices. The I/O-Bus supports up to 256 input words, and 256 output words.

Monitoring I/O-Bus Health

The processor monitors the health of each module on the I/O-Bus, and stores health data in 2 system registers: %SW128 and %SW129. Each bit represents the health of a module on the I/O-Bus, as follows:

- %SW128.0 stores the health of the module at address 1
- %SW129.15 stores the health of the module at address 32

A bit value of 1 indicates a module is healthy.

I/O-Bus Branching

The processors support the use of 170 BNO 671 00 branch interface modules to create a single level of branches on the I/O-Bus.

NOTE: You can create multiple branches using 170 BNO 671 00 branch interface modules, provided those branches are at the same level. You cannot create a second level of I/O-Bus branches by adding a 170 BNO 671 00 branch interface module to a branch created by another 170 BNO 671 00 module.

Creating the I/O-Bus

To create an I/O-Bus, follow these steps:

Step	Action
1	In the **Project Browser**, navigate to and double-click the **Project** →**Configuration** →**I/O-Bus** node: 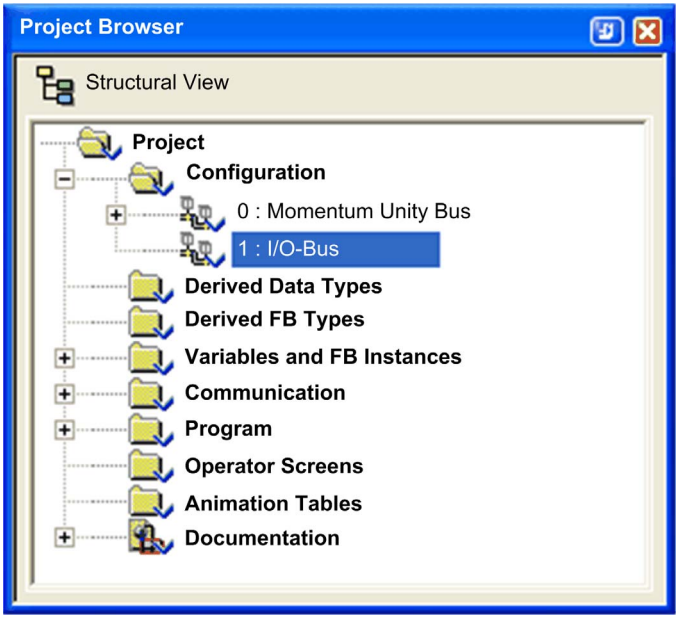 The **I/O-Bus** window opens.

Step	Action
2	In the **I/O-Bus** window, right-click an empty connection point to display the context menu: 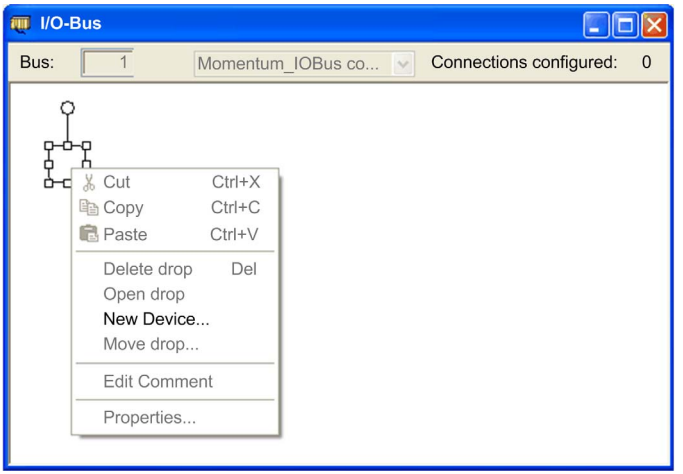

Step	Action
3	Select **New Device...** to open the **New Device** window. 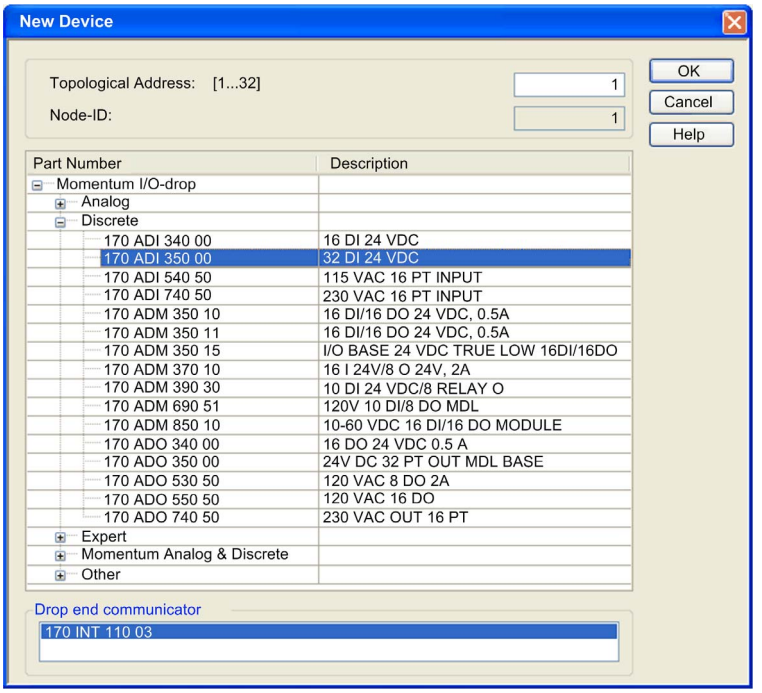
4	In the **New Device** window, do the following: **1.** Select a device from the list. **2.** Enter a **Topological Address** for the selected device. **3.** Click **OK**. **NOTE:** ● The **Drop end communicator** setting is automatically set to the 170 INT 110 03 Interbus adapter. ● The **Topological Address** is also referred to as the “drop number”, and defaults to the next lowest available address, from 1...32.

Step	Action
	NOTE: In place of steps 3 and 4, above, you can instead select a device in the **Hardware Catalog** and drop it onto an empty connection point. The following version of the **New Device** window opens: 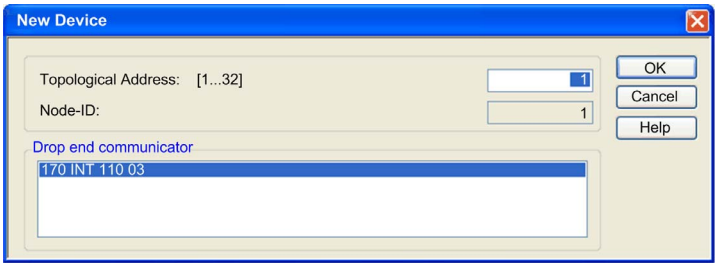 In this window, enter a **Topological Address** and then click **OK**.

Step	Action
5	In the **I/O-Bus** window, the selected device–in this example the 170 ADI 350 00 module–is added: 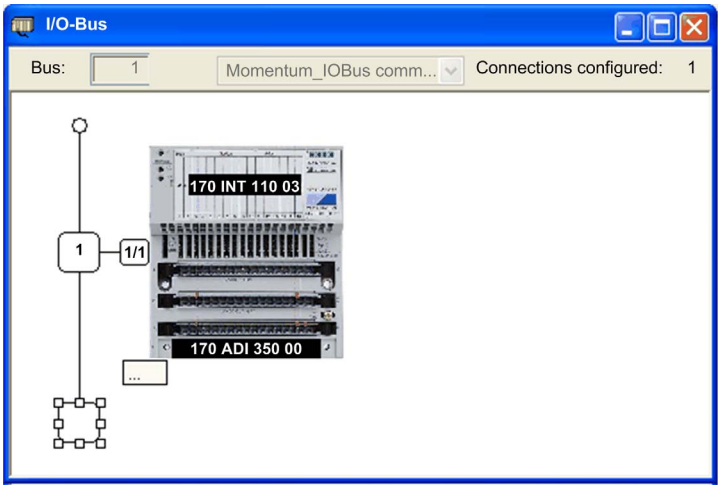 In the **Project Browser**, the new I/O base, and communication module appear as a node on the I/O-Bus: 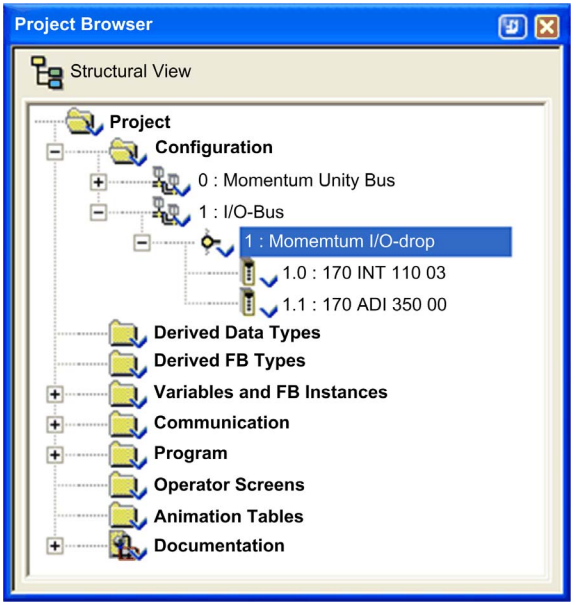 Click **File** →**Save** to retain your edits.

Addressing on the I/O-Bus

I/O-Bus Addressing

A device address on the **I/O-Bus** includes the following elements:

```
Bus number, Drop number, Module ID, Node ID
```

The following example depicts an I/O-Bus with a single sub-branch.

NOTE:

- You can use the 170 BNO 6x1 00 branching module to create sub-branches 1-level deep off of the I/O-Bus main branch.
- You cannot use a branching module to create a sub-branch off of a sub-branch.
- You cannot use the 170 BNO 6x1 00 branching module to enable and disable remote I/O-Bus branches created by inserting a branching module onto the I/O-Bus.

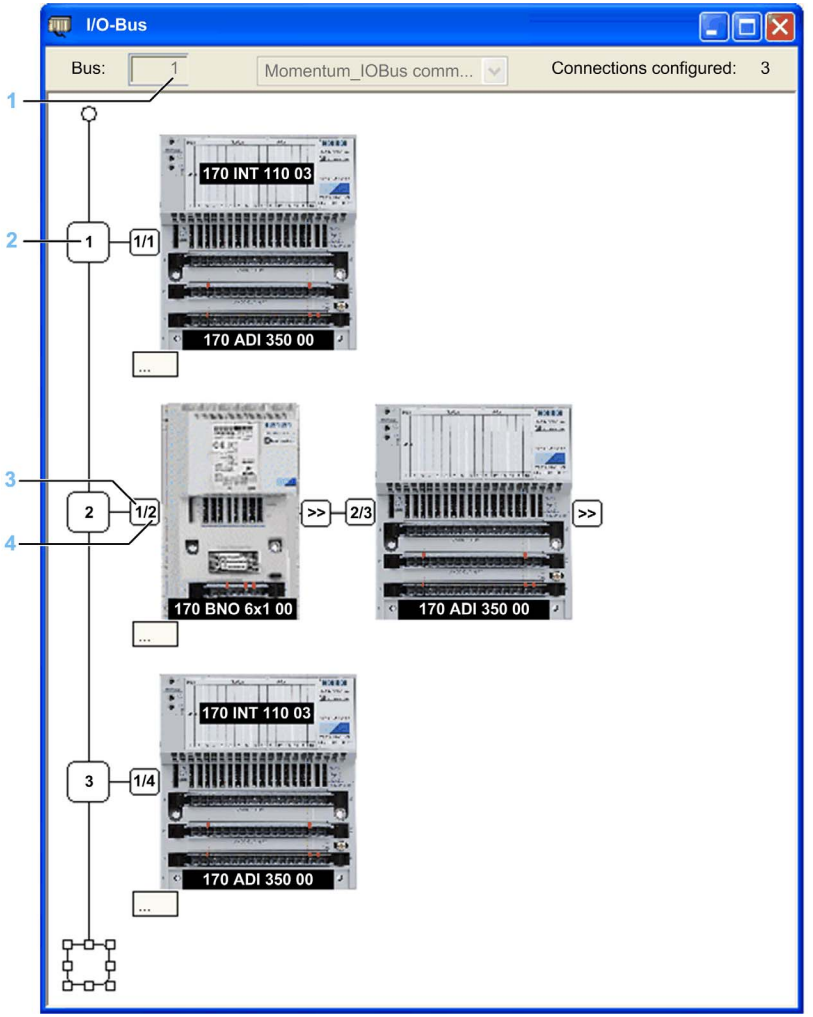

Item	Addressing Element	Description
1	Bus number	The I/O-Bus number is a read-only setting assigned by Unity Pro. **NOTE:** The Momentum Unity Bus is number 0.
2	Topological address	Also known as the ‘drop number’, Unity Pro assigns a default setting equal to the lowest available number from 1...32. This read-write setting is editable in the **New Device** window and in the **I/O-Bus** window.

Item	Addressing Element	Description
3	Module number	The sequential number of the module on the drop–a read-only setting assigned by Unity Pro.
4	Node ID	The sequential number of the module on the entire I/O-Bus–a read-only setting assigned by Unity Pro.

Configuring Momentum Analog I/O Modules

Analog I/O Configuration

Double-click a Momentum analog I/O base unit in the **I/O-Bus** window to open the analog I/O configuration window. An example of an analog input module is depicted, below:

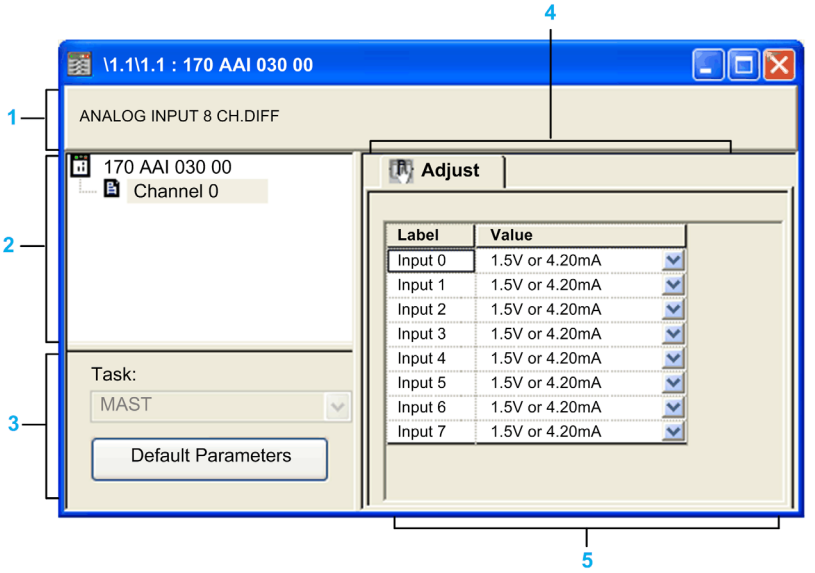

The analog I/O configuration screen includes the following areas:

Area	Function
1	Displays the type of analog module, and the number of channels.

2	Click the:
	● Module number to display the following tabs:
	  ● **Overview**: contains a text description of the module.
	  ● **Memory**: use this tab to configure State RAM for the module *(see page 96)*.
	  ● **I/O Objects**: use this tab to manage I/O objects for this analog I/O module.
	● **Channel** node to display the **Adjust** tab, where you can configure input or output settings for the selected channel.

3	Use this area to define the (**MAST** or **FAST**) task. Click **Default Parameters** to apply the default parameters defined for the module.
4	The tab in the foreground has the focus.
5	Use this area to configure the analog input or output for the selected channel.

Configuring Discrete Momentum I/O Modules

Discrete I/O Configuration

Double-click a Momentum discrete I/O base unit in the **I/O-Bus** window to open the discrete I/O configuration window. An example of a 170 ADM 690 51 configuration screen is depicted, below:

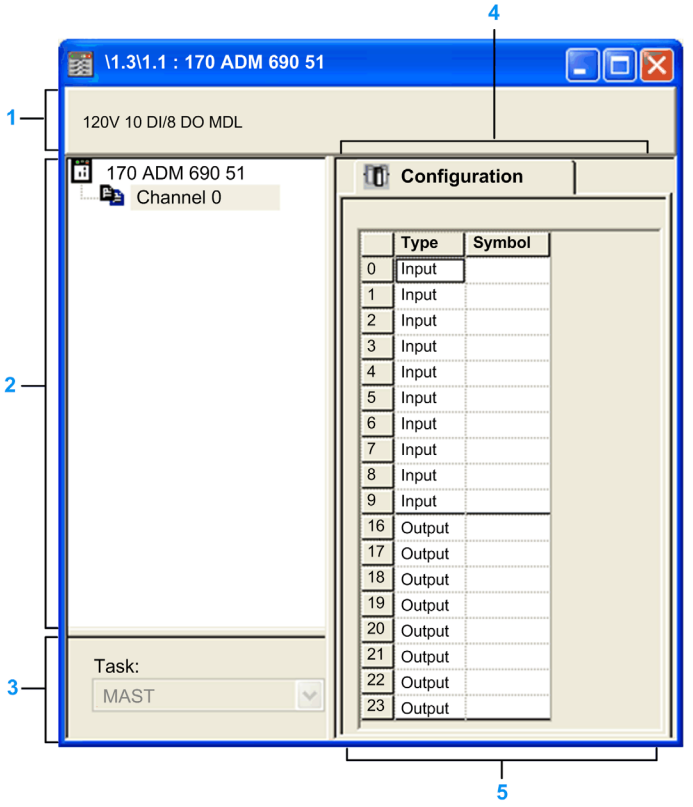

The discrete I/O configuration screen includes the following areas:

Area	Function
1	Displays the type of discrete module, and the number of channels.

Area	Function

2	Click the:
	● Module number to display the following tabs:
	  ● **Overview**: contains a text description of the module.
	  ● **Memory**: use this tab to configure State RAM *(see page 95)* for the module.
	  ● **I/O Objects**: use this tab to manage I/O objects for this discrete I/O module.
	● **Channel** node to display the **Configuration** tab, where you can configure input or output settings for the selected channel.

3	Use this area to define the (**MAST** or **FAST**) task. Click **Default Parameters** to apply the default parameters defined for the module.
4	The tab in the foreground has the focus.
5	Use this area to configure the discrete input or output for the selected channel.

Configuring the I/O Base: Memory Tab

Overview

Use this tab to configure memory management for the selected input / output module. Memory management is performed by configuring State RAM. Topological addressing is not supported.

State RAM Configuration for Discrete Modules

Depending on the selected discrete I/O module, the **State RAM** area of the **Memory** tab contains parameters for discrete input modules, discrete output modules or for discrete mixed modules.

The figure below shows the **Memory** tab for a discrete mixed input / output module as an example:

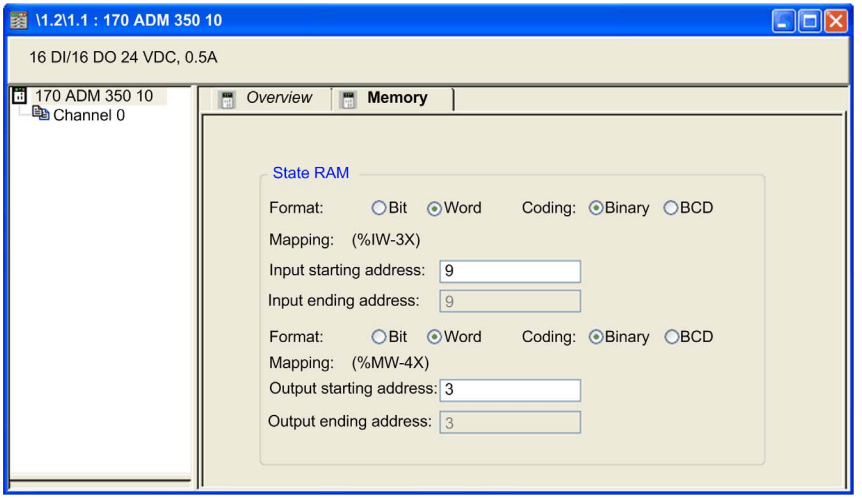

The **State RAM** area contains the following parameters:

Parameter	Description
Format	• **Bit**: Select this option for channel mapping in the discrete mode. This means that each channel is mapped to a `%I` (inputs) or `%M` (outputs). • **Word**[1]: Select this option for channel mapping in the word mode. This means that a group of 8 channels is mapped to a `%IW` (inputs) or `%MW` (outputs).

1. When **Word** is selected as the **Format**, the LSB of the **Word** is mapped to:
- Input 0 on discrete input modules
- Output 0 on discrete output modules

Parameter	Description
Coding	This parameter is only available for channel mapping in word mode when the parameter **Format** is set to **Word**. ● **Binary**: Select this option to use the binary integer format. ● **BCD**: Select this option to use the BCD coding format.
Mapping	This parameter allows you to define the **starting address** for the inputs and outputs. The following sizes of the memory areas are possible: ● For inputs in **Bit** format: `%I-1x` ● For inputs in **Word** format: `%IW-3x` ● For outputs in **Bit** format: `%M-0x` ● For outputs in **Word** format: `%MW-4x` **NOTE:** The State RAM address starts at address 0, but the first available address for discrete and analog modules is `%I1`, `%M1`, `%IW1`, and `%MW1`.
1. When **Word** is selected as the **Format**, the LSB of the **Word** is mapped to: ● Input 0 on discrete input modules ● Output 0 on discrete output modules	

NOTE: Configure every channel of a discrete module. You cannot leave a group of channels in their non-configured state.

NOTE: You can use State RAM objects in event sections. They are refreshed with the frequency of the task where they are declared.

NOTE: State RAM addresses are not checked during input. If any range overlapping is detected or any address exceeds the range of the State RAM, an appropriate message is displayed during project validation or during the variable analyze process.

State RAM Configuration for Analog Modules

Depending on the selected module, the **State RAM** area of the **Memory** tab contains parameters for analog input modules, analog output modules or for analog mixed modules.

The figure below shows the **Memory** tab for a mixed analog input / output module as an example:

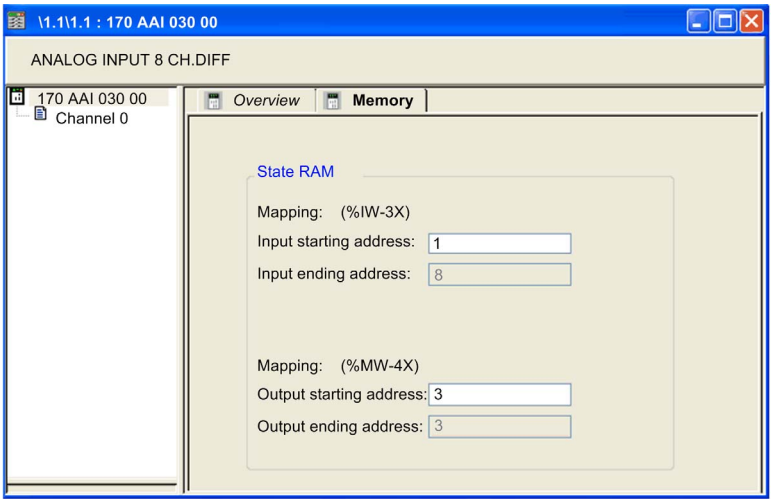

The **State RAM** area contains the following parameters:

Parameter	Description
Mapping	This parameter allows you to define the **starting address** for the inputs and outputs. The following sizes of the memory areas are possible: ● For inputs in **Word** format: `%IW-3x` ● For outputs in **Word** format: `%MW-4x`

NOTE: State RAM addresses are not checked during input. If any range overlapping is detected or any address exceeds the range of the State RAM, an appropriate message is displayed during project validation or during the variable analyze process.

Configuring Channels on the 170 AEC 920 00 Counter Module

Using the AEC Function Block

Use the AEC derived function block (DFB) to configure the 170 AEC 920 00 module in Unity Pro program logic. Each counter channel requires a separate AEC DFB.

NOTE: The 170 AEC 920 00 module DFB is not part of the standard EF/DFB library. To obtain this DFB, you can download it from Schneider Electric Technical Support at http://eclipse.modicon.com.

Each AEC DFB transmits many set values, one after another, which are then stored in the data structure `par_arr`, and returns the current values of the counters. The data transfer of bytes, words, and double words is started using a 0 -> 1 edge at the send input. All bits are sent in each scan cycle.

NOTE: If you include a 170 AEC 920 00 module in your configuration, the module configuration is written to and stored in the first 2 words of %MW memory (%MW1 and %MW2). You may need to reassign the memory locations of variables in your application program to avoid memory conflicts.

AEC DFB Structure

The AEC DFB presents the following structure:

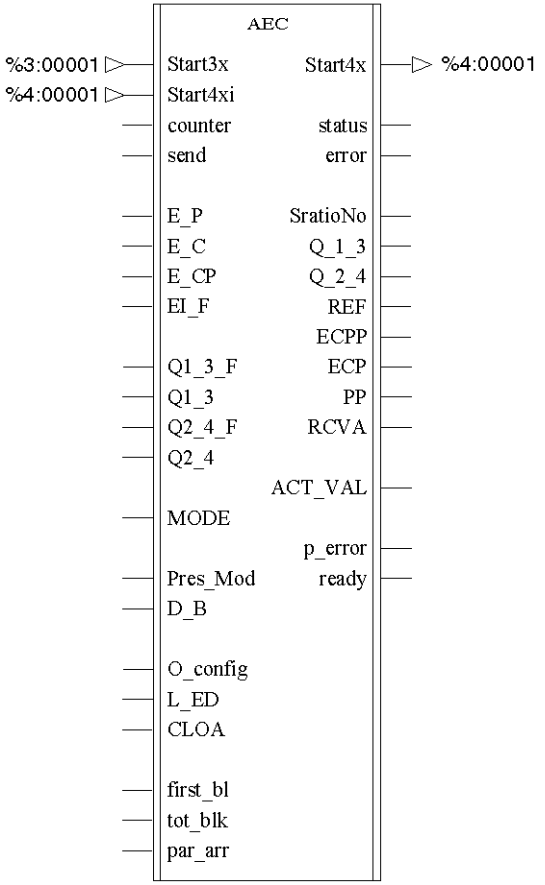

Inputs

Each AEC DFB presents the following outputs:

Parameters	Data Type	Meaning
Start3x	Word Arr 9	1. Address of the 8 input words
Start4xi	Word Arr 9	1. Address of the 8 output words
Counter	Byte	Select counter 1 or 2

Parameters	Data Type	Meaning
send	BOOL	0-1 Edge for the data transfer of byte, word, double word (BOOL values are sent in a cyclic manner)
E_P	BOOL	Enable acceptance of preset value
E_C	BOOL	Software Enable for counter
E_CP	BOOL	Software Enable to freeze counter value
EI_F	BOOL	Enable input filter
Q1_3_F	BOOL	Activate forcing of digital outputs Q1/3
Q1_3	BOOL	Record Valence of digital outputs Q1/3;
Q2_4_F	BOOL	Activate forcing of digital outputs Q2/4;
Q2_4	BOOL	Record Valence of digital outputs Q2/4;
Mode	Byte	4 bits for the choice of operation mode
Pres_Mod	Byte	3 bits for the choice of preset mode
D_B	BOOL	Invert counting direction; effective in all operating modes
O_config	Byte	Configure outputs Q1/2 or Q3/4
L_ED	BOOL	Monitoring of the counter inputs A, B, Z for a line break.
CLOA	BOOL	Behavior of Q1 to Q4 during bus interruption
first_bl	INT	Number of the first data block to be sent
tot_blk	INT	Total number of data blocks to be sent
par_arr	Word Arr 31	Data structure with 31 word data block: 1. word: Reference number 2. word: Set point value (High word) 3. word: Set point value (low word)

Outputs

Each AEC DFB presents the following outputs:

Parameters	Data Type	Meaning
Start4x	Word Arr 9	1. Address of the 8 output words
status	Byte	High-byte of 1st or 2nd input word (Status bits)
error	Byte	Low-byte of 1st or 2nd input word (detected error bits)
SratioNo	Byte	Reference number returned (if detected error = 1 F hex)
Q_1_3	BOOL	Valence of output Q1 or Q3
Q_2_4	BOOL	Valence of output Q2 or Q4
REF	BOOL	Preset value has been accepted
ECPP	BOOL	Freeze HW and SW counter values
ECP	BOOL	Counter has been enabled

Parameters	Data Type	Meaning
PP	BOOL	Accept preset HW and SW values
RCVA	BOOL	1. Count cycle is complete
ACT_VAL	DINT	Current value or capture value
p_error	BOOL	Detected transmission error (wrong value)
ready	BOOL	Data transfer display: 0 = Transmission is active 1 = Transmission is complete

Section 4.5
Configuring the Ethernet Port in Unity Pro

Configuring the 171 CBU 98090 and 171 CBU 98091 Ethernet Port

Configuring the Ethernet Port

To use the Ethernet port on the 171 CBU 98090 and 171 CBU 98091 processors, you need to perform the following tasks in Unity Pro:

- create an Ethernet network
- link the new Ethernet network to the Ethernet port on the processor

Follow these steps to configure the Ethernet port:

Step	Action
1	Create an Ethernet network. In the **Project Browser**, navigate to **Project** → **Communication** →**Networks**.

Step	Action
2	Right click the **Networks** node, and select **New Network** from the menu: 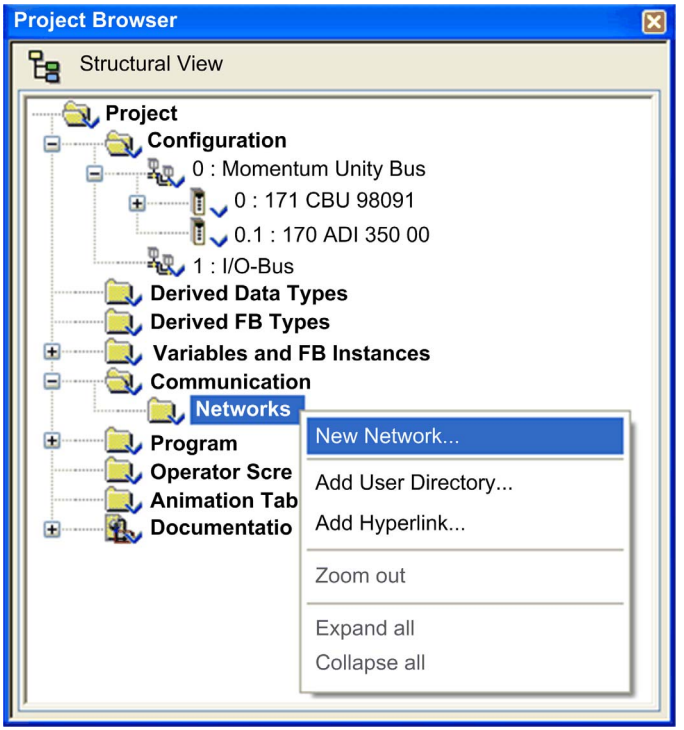 The **Add Network** dialog opens.

Step	Action
3	In the **Network** tab of the **Add Network** dialog, select **Ethernet** as the network type, and accept the default network name (in this example, the default network name **Ethernet_1**: 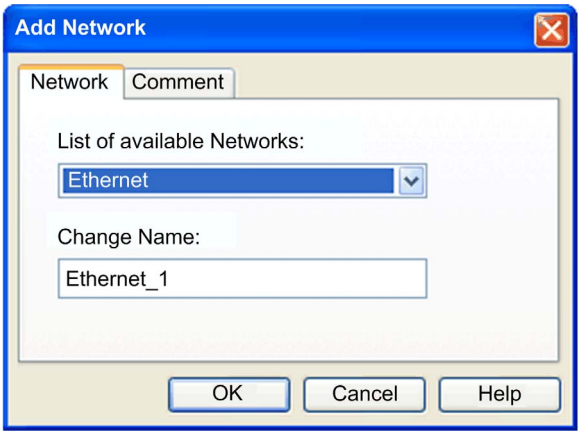
4	Click **OK** to save the new Ethernet network. The next task is to associate the new network with the Ethernet port. on the processor.
5	In the **Project Browser**, navigate to and open the **Project →Configuration** folder.

Step	Action
6	Double-click the **Momentum Unity Bus** node to display the processor on its I/O base: 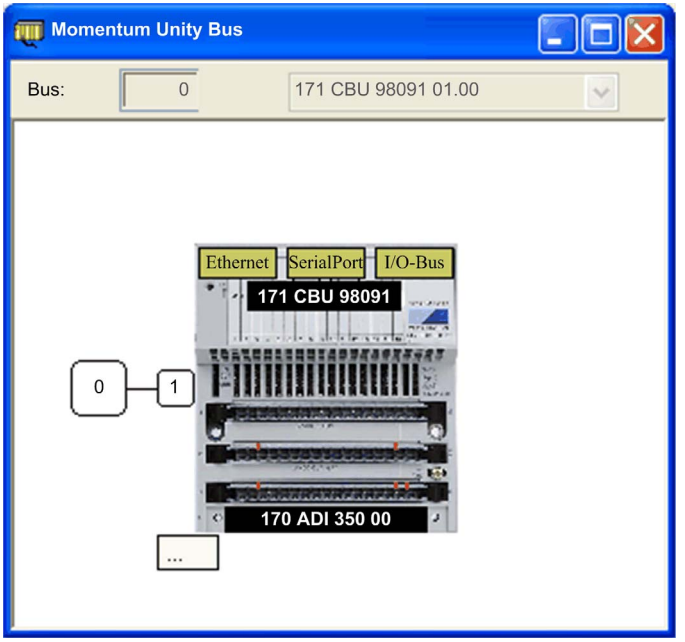
7	In the **Momentum Unity Bus** window, double-click the **Ethernet** port to open the configuration window for that port.

Step	Action
8	In the Ethernet port configuration window: 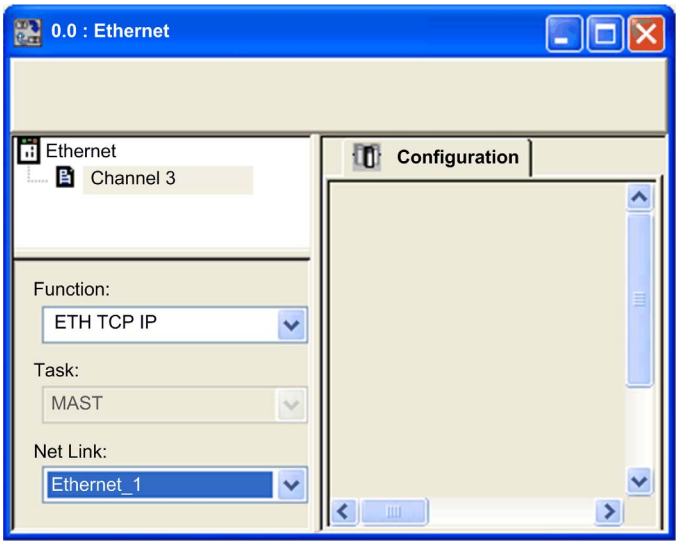 **1.** Select the Ethernet channel. **NOTE:** The Ethernet port operates at channel 3 in both the 171 CBU 98090 and the 171 CBU 98091. **2.** Select **ETH TCP IP** in the **Function** list. **NOTE:** Selecting **ETH TCP IP** in the **Function** list displays the **Task** and **Net Link** fields. **3.** In the **Net Link** field, select an Ethernet network (here **Ethernet_1**) to link to the Ethernet port.
8	In the Unity Pro menu bar, click the **Validate** button; then click the **Save** button.

Section 4.6
Configuring Ethernet Services

Overview

This section describes how to enable and configure Ethernet services provided by the 171 CBU 98090 and 171 CBU 98091 processors.

What Is in This Section?

This section contains the following topics:

Topic	Page
Enabling Ethernet Services	108
Configuring IP Address Settings in Unity Pro	109
Modbus Messaging and Access Control	111
I/O Scanning	114
Global Data	119
SNMP	123
Bandwidth Monitoring	125

Enabling Ethernet Services

Ethernet Services

The 171 CBU 98090 and the 171 CBU 98091 processors provides the following Ethernet services:

- IP address assignment
- Modbus Messaging and Access Control
- I/O Scanning
- SNMP agent
- Bandwidth Monitoring

The 171 CBU 98091 processor also includes the Global Data automatic data exchange service.

Both the I/O Scanning service and the Global Data service can be enabled or disabled using Unity Pro. The other Ethernet services remain continuously enabled during operations.

Enabling Ethernet Services

To enable Ethernet services for the processor:

Step	Action
1	In the Unity Pro **Project Browser**, select an Ethernet network by navigating to **Project** →**Communication** →**Networks**.
2	Double-click an existing Ethernet network. A configuration window for the selected Ethernet network opens.
	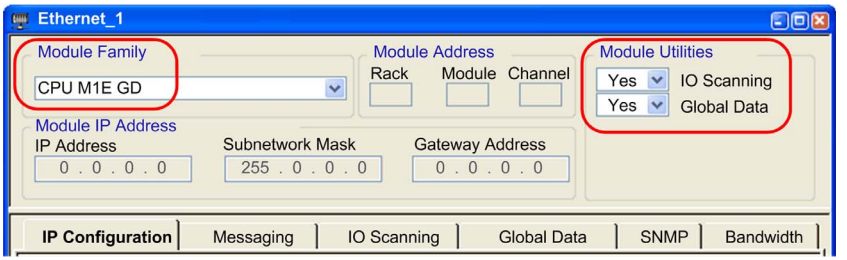
	NOTE: The **Module Family** area is read-only and displays the selected processor type (in this example, **CPU M1E-GD**).
3	In the **Model Utilities** area, you can select **Yes** from the drop-down list to enable: ● **IO Scanning** ● **Global Data** (for the 171 CBU 98091 processor)

Configuring IP Address Settings in Unity Pro

Configurable IP Address Settings

Use the **IP Configuration** tab to specify the source that will assign IP address configuration settings to the processorr.

Accessing IP Configuration

To access the **I/O Scanning** tab:

Step	Action
1	In the **Project Browser**, navigate to the **Project** →**Communication** →**Networks** node.
2	Double-click the appropriate Ethernet network to open its configuration dialog.
3	Select the **IP Configuration** tab to open that page:
	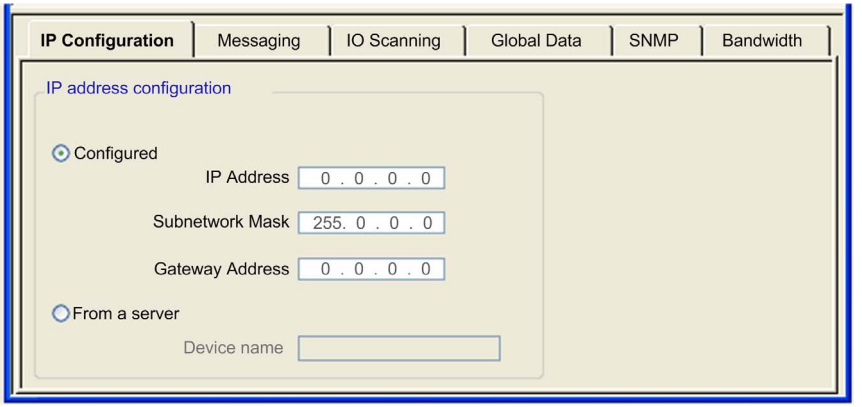
4	Enter the parameter settings for IP configuration. Refer to IP configuration parameters (below).
5	Click the validate check box in the Unity Pro tool bar to confirm the IP configuration parameter settings.

IP Configuration Parameters

The following IP parameters can be configured for the 171 CBU 98090 and 171 CBU 98091 processors:

Parameter	Description
IP address configuration	Use the **IP Address Configuration** area to specify the source of IP address settings for the processor.

Parameter	Description	
• **Configured**	Select this to assign the following IP address settings in this page:	
	• **IP Address**	The IP address of the processor.
	• **Subnetwork Mask**	The mask defines the part allocated to the subnetwork identifier in the IP address.
	• **Gateway Address**	The IP address of the default gateway to which messages for other networks are transmitted.
	NOTE: Obtain the appropriate network address and subnetwork mask from your system administrator. The IP address assignment process is described in the topic describing the Ethernet port *(see page 36)*.	
• **From a server**	Select this to let a BOOTP or DHCP server assign IP address settings to the processor. **NOTE:** When you select **From a server**, the manually configured IP parameters have no effect and are grayed out.	
	• **Device name**	The device name that is associated with the served IP configuration in the BOOTP/DHCP server.

NOTE: The processor supports the **Ethernet II** frame format and complies with the RFC 894 standard.

Modbus Messaging and Access Control

Modbus Messaging Service

The 171 CBU 98090 and 171 CBU 98091 processors provides a Modbus Messaging service that permits remote devices to connect to–and communicate with–the processor. The processor supports up to 32 simultaneous Modbus TCP server connections.

Controlling Access

Use the Access Control list in the **Messaging** tab to restrict access to the processor in its role as Modbus TCP server. When Access Control is enabled, only devices with IP addresses added to the list can communicate with the processor over TCP port 502. The Access Control list can contain up to 128 devices.

If you enable Access Control, consider granting access to the following devices:

- your maintenance laptop
- every target device to which the processor adapter may send a Modbus TCP message

When Access Control is disabled, any Ethernet device can establish a TCP connection with the processor.

Navigating to the Messaging Configuration Tab

To open the **Messaging** tab:

Step	Action
1	In the **Project Browser**, navigate to the **Project** →**Communication** →**Networks** node.
2	Double-click the appropriate Ethernet network to open its configuration dialog.
3	Select the **Messaging** tab to open that page:

Step	Action
	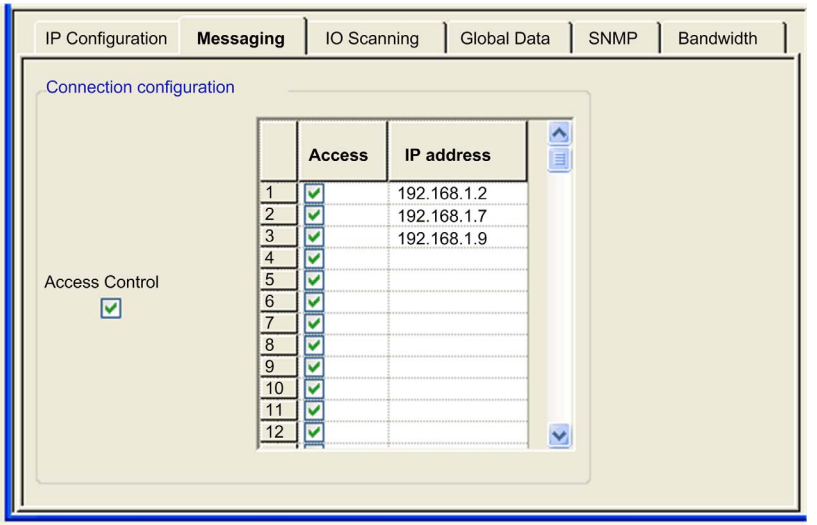
4	Enter the parameter settings for Access Control. Refer to the Access Control configuration parameters (below).
5	Click the validate check box in the upper tool bar to confirm the Modbus Messaging parameter settings.

Configuring Access Control

To enable the access control function:

Step	Action
1	In the **Connection Configuration** area, select **Access Control**. The Access Control list is enabled.
2	To grant a remote device permission to access the processor, complete a row in the list as follows: ● Place a check mark in the **Access** column. ● Type in the **IP address** for the remote device. The added device is permitted to open a TCP connection to the processor when Access Control is enabled.
3	Repeat step 2 for every remote device–up to 128 devices–that you want to be able to open a TCP connection to the processor.

NOTE: If you select the **Access Control** check box but do not enter device addresses in the Access Control list, no Ethernet communications to or from the processor can occur.

Modbus TCP Messaging Commands

The processor supports the following Modbus TCP commands

Function Code / Sub-Code	Description
FC01	Read coils.
FC02	Read discrete inputs.
FC03	Read multiple registers.
FC04	Read input registers.
FC05	Write single coil.
FC06	Write single register.
FC07	Read exception status.
FC08 / 00	Return query data.
FC08 / 11	Return bus message count.
FC08 / 12	Return bus communication detected error count.
FC08 / 13	Return bus exception detected error count.
FC08 / 14	Return slave message count.
FC08 / 15	Return slave no response count
FC08 / 16	Return slave NAK count
FC08 / 17	Return slave busy count.
FC08 / 18	Return bus character overrun count.
FC08 / 21	Diagnostics Ethernet
FC08 / 22	Retrieving Ethernet channel-specific data from an Ethernet port
FC11	Get communications event counter: for serial line only.
FC12	Get communications event log: for serial line only.
FC15	Write multiple coils.
FC16	Write multiple registers.
FC22	Mask write register.
FC23	Read/write multiple registers.
FC43 / 14	Read device identification.

I/O Scanning

Introducing I/O Scanning

The 171 CBU 98090 and 171 CBU 98091 processors includes an I/O Scanning service that exchanges register data with remote devices on the network over Modbus TCP. The service is enabled using the I/O Scanning configuration tab in Unity Pro.

The I/O Scanning service supports the following Modbus function codes:
- 3: read registers
- 16: write registers
- 23: read/write registers

Use the I/O Scanning service when you want the processor to exchange data with a remote device at a fixed rate. Suitable applications include:
- fast repetitive communications
- applications that call for communication between one device and many remote devices, where different data is exchanged with different remote devices
- applications that need to exchange data to more devices than is possible using the existing Modbus messaging function blocks
- automatic event handling
- controlling I/O devices

For non-cyclic communications, event-triggered actions, report generation, or notification of certain events (for example, excessive network or device load produced by data exchanges), use the Modbus Messaging service *(see page 111)* instead of I/O Scanning.

I/O Scanning Features

The processor includes the following I/O Scanning features:

Feature	Description
Number of I/O devices supported	0...32
Size of read per device	0...125 words
Size of write device	0...100 words
Maximum size of total read	500 words
Maximum size of total write	500 words
Maximum size of total read + write	512 words
Repetitive rate	10 ms...60000 ms
Application storage area	Non-contiguous %MW
Health status	1 bit per I/O scanning line entry

I/O Scanning Diagnostics

The I/O scanner monitors the health of Modbus communication, and stores health data in a block of two registers in the %IW memory area.

The control application can interrogate the health block as needed, and the application can confirm that communication with the remote device is healthy. If a communications interruption occurs, the application detects it and can respond based upon the needs of the application.

NOTE: You can also use the I/O Scanning web page *(see page 160)* to view the status of I/O Scanning.

Accessing I/O Scanning

To access the **I/O Scanning** tab:

Step	Action
1	In the **Project Browser**, navigate to the **Project** →**Communication** →**Networks** node.
2	Double-click the appropriate Ethernet network to open its configuration dialog.
3	In the **Module Utilities** field, select **Yes** in the **IO Scanning** menu.
4	Select the **I/O Scanning** tab to open the I/O Scanning configuration screen:

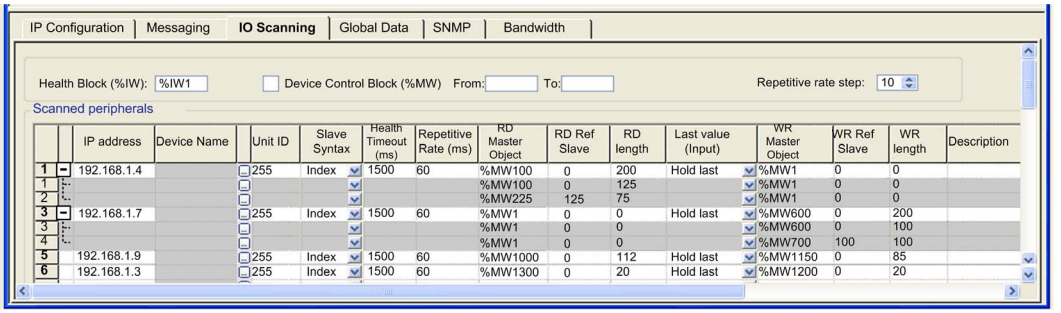

5	Enter the parameter settings under each of the column headings for one line of the I/O scanner configuration. Refer to I/O Scanning parameters (below).
6	Click the validate check box in the upper tool bar to confirm the I/O Scanning parameter settings.

I/O Scanning Parameters

The parameters above the table describe how the processor performs the scan:

Parameter	Description
Health Block (%IW)	Use the **Health Block** field to define the first word in a health table. The health table has a length of up to 2 words. Each bit in the table represents the status of a scanned module. The default setting is %IW1. **NOTE:** Modules are mapped to health words and bits, as indicated by the following examples: ● Line 1 is the 1st scanned module and maps to word 1, bit 0. ● Line 16 is the 16th scanned module, and maps to word 1, bit 15. ● Line 17 is the 17th scanned module, and maps to word 2, bit 0. ● Line 32 is the 32nd scanned module, and maps to word 2, bit 15.
Device Control Block	Use the **Device Control Block** field to disable I/O Scanning for a selected range of devices. When I/O Scanning is disabled, a master – for example a PLC – can assert control over an I/O slave device. When the check box is: ● De-selected (default): I/O scanning is enabled for devices appearing in the I/O scanning list. ● Selected: I/O scanning is disabled for devices in the range specified by the **From** and **To** IO scanning line numbers, as described in the Health Block description, above. **NOTE:** When I/O scanning is disabled for a device, the I/O scanner closes the connection to that device and sets the **Health Bit** to 0 (unhealthy) for that device.
Repetitive rate step	The **Repetitive rate step** is set in multiples of 10 ms (the minimum) through 200 ms (the maximum). The **Repetitive rate (ms)** column is where you enter a rate of time for how often you want the I/O scanner to send a query to the device after the rate has timed out. **NOTE:** The **Repetitive rate (ms)** of the I/O scanner table is a multiple of the rate displayed in the **Repetitive rate step** box. The real repetitive rate being executed by the I/O scanner service is shown in the **Repetitive rate (ms)** column. **NOTE:** If an entry in the **Repetitive rate (ms)** column is not a multiple of the **Repetitive rate step**, the entry is rounded up to the next multiple.

The parameters in the table describe the devices to be scanned:

Parameter	Description
Entry #	Valid range: 1 ... 32 Each entry represents an I/O Scanning exchange on the network.
IP address	The IP address of the scanned Ethernet slave device.

Parameter	Description
Device Name	To configure a device (Advantys island, DTM or PRA), click the **...** button to open the **Property** dialog to start the device configuration software. **NOTE:** While the **Property** box is open, **I/O Scanning** cannot be edited.
Unit ID	The bridge index or slave device number when communicating from an Ethernet to another network bridging device. If you are using an Ethernet to Modbus bridge, this indicates the Modbus slave address number. If using an Ethernet to Modbus Plus bridge, this identifies the bridge index table entry: ● value range: 1 to 255 ● default value: 255
Slave Syntax	Use this drop-down menu to pick the way **RD Ref Slave** and **WR Ref Slave** values are displayed. The 4 choices are (with an example): ● **Index**: 100 ● **Modbus**: 400101 ● **IEC 0**: %MW100 ● **IEC 1**: %MW101
Health Timeout (ms)	This field sets the maximum interval between the responses from a remote device: ● range: 1 ms to 50 seconds ● interval: 1 ms After this time period expires, the received data is invalid. **NOTE:** Configure the health timeout setting to a longer time value than the repetitive rate.
Repetitive rate (ms)	The rate at which data will be scanned, from 0...60000 in multiples of the **Repetitive rate step**.
RD Master Object*	Destination address in the master PLC where, from each device, newly read information is stored. This parameter cannot be accessed. It is calculated automatically as the sum of: ● The **From** address (beginning) of **Read ref.** (in the zone above the table) ● The **RD length** value (in the table below) **NOTE:** Read and write master locations are non-contiguous.
RD Ref Slave**	Source address index in the slave/remote device
RD length	Number of words to read **NOTE:** If you enter a value greater than the maximum value of 125 words, Unity Pro automatically applies the maximum value of 125 words, then creates an additional row or rows with the difference.
Last value (input)	This field configures the behavior of inputs in the event of a detected access error in relation to the remote device (for example: inoperative network or device power supply, and so on): ● **Set to 0**: fall back to 0 ● **Hold last**: maintain last value

Parameter	Description
WR Master Object*	Source address of the master PLC whose data is being written into the slave/remote device. This parameter cannot be accessed. It is calculated automatically as the sum of: ● The **From** address (beginning) of **Write ref.** (in the zone above the table) ● The **WR length** value (in the table below) Write operations are performed at the word level.
WR Ref Slave**	The address of the first word written into the slave/remote device.
WR length	Number of words to be written. **NOTE:** If you enter a value greater than the maximum value of 100 words, Unity Pro automatically applies the maximum value of 100 words, then creates an additional row or rows with the difference.
Description	Additional information
*Master refers to the client PLC that makes the request. **Slave refers to the server from which data is read or to which data is written.	

Global Data

Introducing the Global Data Service

The Global Data service in the 171 CBU 98091 processor provides an automatic data exchange for the coordination of PLC applications. Its key features include:

- data exchanges based on a standard producer/consumer protocol, giving optimal performance while maintaining a minimum network load
- real-time exchanges between stations in the same distribution group, which share variables used for PLC coordination
- synchronization of remote applications
- sharing of a common database among several distributed applications

Global Data Distribution Group

A Global Data distribution group consists of one or more stations on the same Ethernet subnet that exchange data variables. The following rules govern a Global Data variable distribution group:

- A Global Data distribution group can consist of up to 64 stations.
- A Global Data variable distribution group is identified by its **Group Name**, which is assigned in the Unity Pro **Data Editor**.
- There can be only one Global Data variable distribution group per logical IP subnet.
- Each station in a variable distribution group operates on the same Class D IP multicast address with a configurable range of 224.0.0.0 through 239.255.255.255.

Global Data Variables

The following rules apply to the Global Data variable exchanged by stations in the distribution group:

- A variable consists of a single block of contiguous words.
- Each station can publish 1 variable consisting of up to 128 words.
- Each station can subscribe to a maximum of 64 variables. However, if that station also publishes a variable, it can subscribe to a maximum of only 63 variables.
- Each station can subscribe to any variable published by another station in the group.
- Each station has a maximum subscription of 2,048 total words.

Global Data Tab

To access the configuration parameters on the Global Data tab:

Step	Action
1	In the **Project Browser**, navigate to the **Communication** →**Networks** subdirectory.
2	Double-click the appropriate Ethernet network to open its configuration dialog.
3	In the **Module Utilities** field, select **Yes** in the **Global Data** menu.
4	Select the **Global Data** tab:

Step	Action
	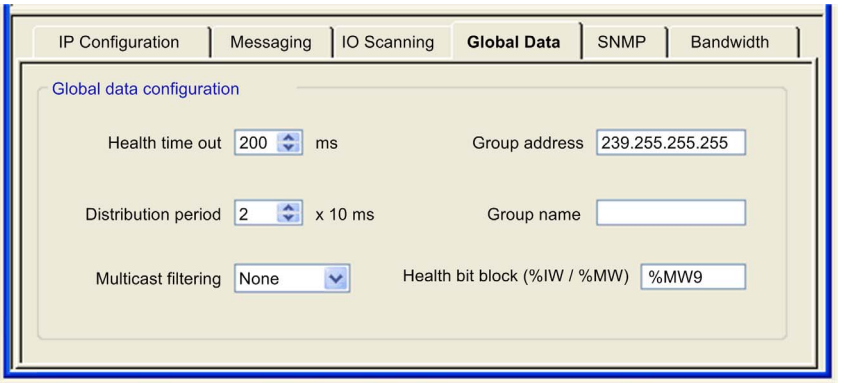
5	In accordance with your system and application needs, elect and assign the Global Data configuration parameters, as described below.
6	Configure variables for the Global Data service. (see below)

Global Data Configuration Parameters

The following parameters can be set in the **Global data configuration** area on the **Global Data** tab:

Parameter	Description
Health time out	Use this field to set the time-out value: from 50...15 000 ms in increments of 50 ms. Default = 200 ms.
Group address	Use this to identify the multicast IP address (class D) of the distribution group to which the station belongs: ● minimum value: 224.0.0.0 ● maximum value: 239.255.255.255 (Default)
Distribution period	Use this field to set the frequency of the publication. The value is multiplied by 10 ms to determine the time between updates. The minimum value is 2, yielding a minimum frequency of 20 ms.
Group name	Input the name that associates a variable from the **Data Editor** with a module. Each group name is created in the Unity Pro **Data Editor**.
Multicast filtering	Use this check box to turn multicast filtering ON and OFF. Values include: ● **None**: Disables GRMP. Data will be sent to each end device in the network. (Default) ● **GRMP**: Enables GRMP (general router management protocol). **NOTE:** Filtering can reduce data flow on large networks. Multicast filtering requires the use of switches and routers that support the selected protocol.

Parameter	Description
Health bit block	Input the address for the first word – of 4 contiguous words – that store health data for the stations that comprise the Global Data distribution group. Default = %MW9. Each bit in the sequence of words starting at this address indicates the health of an associated station. A bit value of: ● 1 = successful publication or subscription ● 0 = the **Health time out** period elapsed before completion of the publication or subscription

Configure Global Data Variables

Global Data variables are configured in the **Data Editor**:

Step	Action
1	In the Unity Pro main menu, select **View** →**Structural View** to display that view of the project in the **Project Browser**.
2	Navigate to and double-click **Variables and FB Instances**: 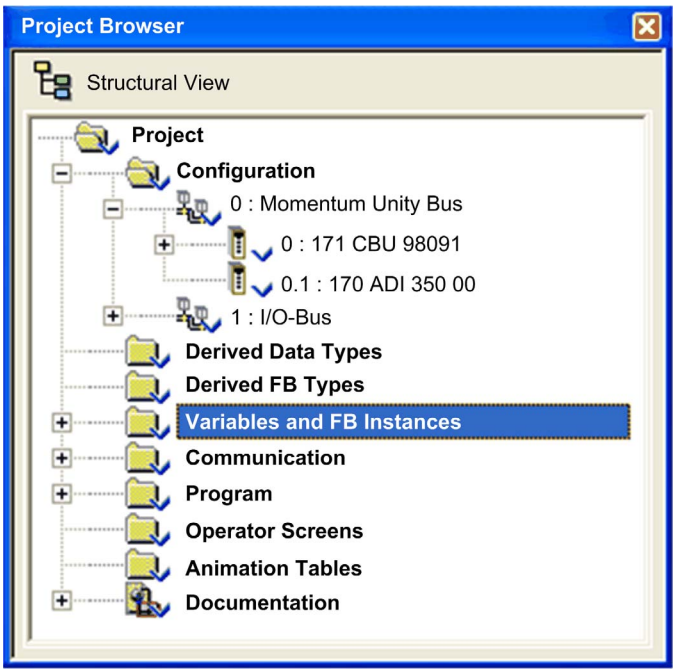 The **Data Editor** table (displayed in step 5, below) appears. **NOTE:** The **Data Editor** does not yet display the **Global data** column.

Step	Action
3	Right-click in the first row in the **Data Editor**, and select **Customize Columns** from the menu. The **Customize Columns** window appears: 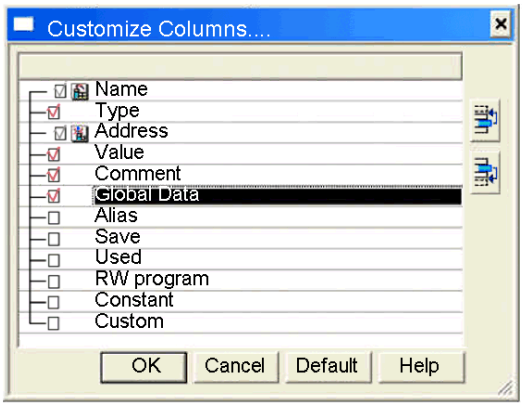
4	In the **Customize Columns...** dialog, select the **Global Data** check box, and press **OK**.
5	The **Data Editor** now displays the **Global data** column: 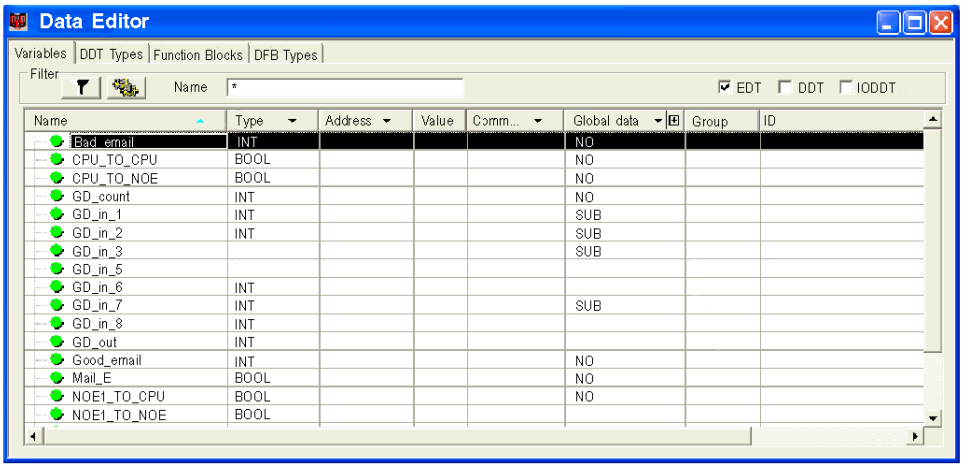
6	In the **Global data** column, select one of the following for each variable: ● **NO**: not published and not subscribed ● **PUB**: published ● **SUB**: subscribed
7	Associate each Global Data item with a group name in the **Group** column.
8	Enter the identifier of a remote station in a distribution group in the **ID** column.

SNMP

Introducing the SNMP Agent

The 171 CBU 98090 and 171 CBU 98091 processors include an SNMP v1 agent. An SNMP agent is a software component that allows access to the processor diagnostic and management information via the SNMP service.

SNMP browsers, network management software, and other tools typically use SNMP to access this data. In addition, the SNMP agent can be configured with the IP address of up to 2 devices–typically PCs running network management software–to be the target of event driven trap messages. These trap messages inform the management device of events such as cold start, and detected authentication failures.

Use the **SNMP** tab to configure the SNMP agent in the processor. The SNMP agent can connect to and communicate with up to 2 SNMP managers as part of an SNMP service. The SNMP service includes:

- authentication checking, by the processor, of any SNMP manager that sends SNMP requests
- management of event, or trap, reporting by the processor

SNMP Tab

The following procedure shows how to access the **SNMP** tab:

Step	Action
1	In the **Project Browser**, navigate to the **Communication** →**Networks** subdirectory.
2	Double-click the appropriate Ethernet network to open its configuration dialog.
3	Select the **SNMP** tab to open the SNMP configuration screen:
	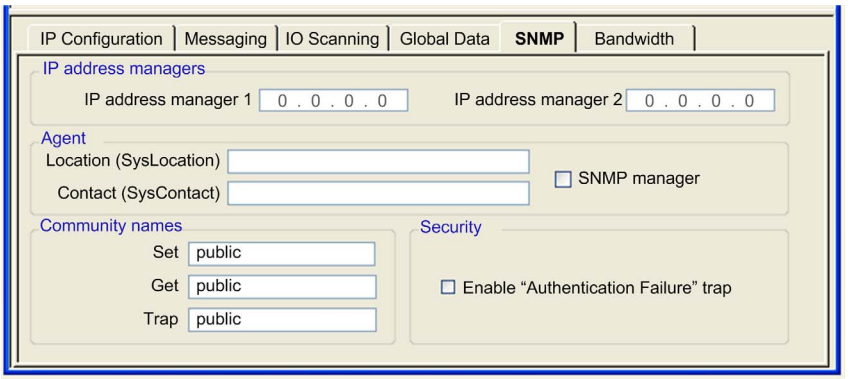
4	Enter the parameter settings for the SNMP configuration. Refer to the Configuring SNMP Properties *(see page 124)* section, below, for a description of SNMP settings.

Configuring SNMP Properties

The processor includes the following SNMP properties:

Property	Description
IP address managers:	
IP address manager 1	The IP address of the first SNMP manager to which the SNMP agent sends notices of traps.
IP address manager 2	The IP address of the second SNMP manager to which the SNMP agent sends notices of traps.
Agent:	
Location	The device location (32 characters maximum)
Contact	Information describing the person to contact for device maintenance (32 characters maximum).
SNMP manager	When this checkbox is: ● selected: The location and contact information are editable in this page. ● de-selected: Location and contact settings are not editable in this page. Default = de-selected.
Community names:	
Get	Password required by the SNMP agent before executing read commands from an SNMP manager. Default = **public**.
Set	Password required by the SNMP agent before executing write commands from an SNMP manager. Default = **public**
Trap	Password an SNMP manager requires from the SNMP agent before the manager will accept trap notices from the agent. Default = **public** **NOTE:** ● Traps are sent via UDP port 161. ● You may need to configure trap settings on the SNMP manager, consistent with trap settings on the processor.
Security:	
Enable “Authentication Failure” trap	If an unauthorized manager sends a Get or Set command to the SNMP agent, the agent sends a trap notification message to the manager. Default = de-selected.

Bandwidth Monitoring

Introducing Bandwidth Monitoring

You can use the Bandwidth Monitoring service to monitor the 171 CBU 98090 and 171 CBU 98091 processor CPU allocation for each of the following services:

- Global Data *(see page 119)* (for the 171 CBU 98091 processor)
- I/O Scanning *(see page 114)*
- Modbus Messaging *(see page 111)*

Accessing and Configuring the Bandwidth Tab

The following procedure shows how to access the **Bandwidth** tab:

Step	Action
1	In the **Project Browser**, navigate to the **Communication** →**Networks** subdirectory.
2	Double-click the appropriate Ethernet network to open its configuration dialog.
3	Select the **Bandwidth** tab to open the Bandwidth Monitoring screen:
	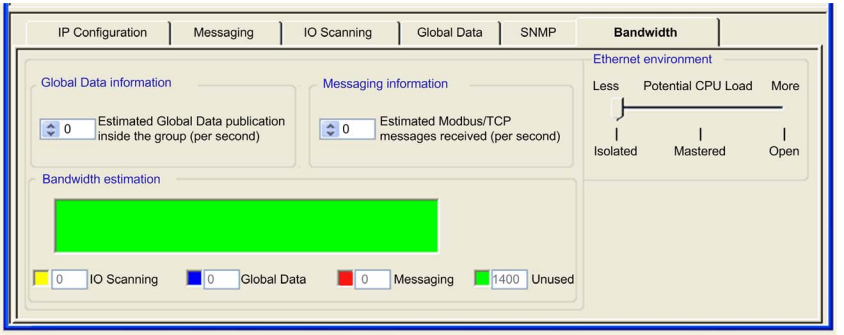
4	Configure the Global Data *(see page 119)*, I/O Scanning *(see page 114)*, and Modbus Messaging *(see page 111)* services before configuring the Bandwidth Monitoring parameters.
5	Enter the parameter settings for the Bandwidth Monitoring. Refer to the Bandwidth Monitoring Properties *(see page 126)* section, below, for a description of Bandwidth Monitoring settings.

Bandwidth Monitoring Properties

The **Bandwidth** tab includes the following properties:

Property	Description

Ethernet Environment - Potential CPU Load	Select the environment that describes your Ethernet network:
	● **Isolated**: Limits the impact of Ethernet communication on the scan by limiting the total number of Ethernet messages (I/O scanner included) polled every second to 500.
	● **Mastered**: Increases the total number of Ethernet messages (I/O scanner included) polled every second to 1000.
	● **Open**: Increases the total number of Ethernet messages (I/O scanner included) polled every second to 1600.
	  ● 1600 for the 171 CBU 98090
	  ● 2200 for the 171 CBU 98091

Global Data information	Enter an estimate of the number of publication periods. The value entered is the estimated average publication frequency of the distribution (local and remote) group stations.
Messaging information	Enter an estimate of the number of transactions per second.

Controlling Ethernet Messaging

During runtime, Momentum Unity executes both master (MAST) tasks and Ethernet messaging (ETH) tasks. Momentum Unity prioritizes ETH tasks, and executes ETH tasks before it executes MAST tasks. Because Momentum Unity prioritizes ETH tasks, you need to configure Ethernet communications so that sufficient bandwidth remains for the execution of the MAST tasks.

To accomplish this, you need to:

- separately configure each component of Ethernet communications (Global Data, I/O Scanning, and Modbus Messaging) to control the bandwidth used by each service, and
- limit the number of Ethernet messages per second that the CPU may handle. As indicated above, set the **Potential CPU Load** value to one of the following limits:
  - **Isolated**: 500 messages per second
  - **Mastered**: 1000 messages per second
  - **Open**: Either:
    ⇒1600 messages per second for the 171 CBU 98090
    ⇒2200 messages per second for the 171 CBU 98091

To decrease the message load contributed by the Global Data service, increase the **Distribution period** setting. Each device on the network can publish 1 variable, and subscribe to up to 63 variables. The estimated loads, below, are presented in messages per second:

Distribution Period (ms)	Global Data Variables			
	8	16	32	64
20	400	800	1600	–
30	267	533	1067	–
40	200	400	800	1600
50	160	320	640	1280
60	133	267	533	1067
70	114	229	457	914
80	100	200	400	800
90	89	178	356	711
100	80	160	320	640
– indicates a value beyond the upper limit of 1600 messages per second				

NOTE: When compiling a program, Momentum Unity considers only subscribed variables, not published variables. As a result, Momentum Unity may validate a program that causes bandwidth overload during runtime. When computing the bandwidth load required for Global Data, consider both published and subscribed variable messaging.

To decrease the message load contributed by the I/O Scanning service, increase the **Repetitive rate** setting. The estimated loads, below, are presented in messages per second:

Repetitive rate (ms)	I/O Scanned Devices			
	8	16	32	64
10	800	1600	–	–
20	400	800	1600	–
30	267	533	1067	–
40	200	400	800	1600
50	160	320	640	1280
60	133	267	533	1067
70	114	229	457	914
80	100	200	400	800
90	89	178	356	711
100	80	160	320	640
– indicates a value beyond the upper limit of 1600 messages per second				

To decrease the message load contributed by the Modbus Messaging service, increase the **Message Sampling period** of the several Modbus clients operating on the network. The messaging rate can be calculated as follows:

```
Messaging Rate = ((1/ Message Sampling period) x Objects
```

This formula includes the following elements:

Element	Description
Messaging Sampling period	The interval at which messages are processed
Objects	The number of devices, either client or server, that are actively communicating

NOTE: Message rates are solved in 10 ms increments. Messages that exceed the message rate per 10 ms increment are buffered. Buffered messages are then added to the next 10 ms time slice.

Section 4.7
Programming In Unity Pro

Programming the Momentum Platform in Unity Pro

Overview

The Momentum for Unity Pro platform lets you use both IEC and LL984 programming languages when programming your control network projects. When programming your project in Unity Pro, take note of the following programming rules.

Locating Double-Register Variables at an Even-Numbered Address

When declaring and locating variables that are double-word data types – for example `DINT`, `DWORD`, `REAL`, and `UDINT` – you need to locate the variable beginning at an even-numbered memory address.

Timing the Execution of XXMIT and L9_XMIT Function Blocks

Your Unity Pro application program may contain a multiple of `XXMIT` or `L9_XMIT` function blocks. However, the 171 CBU 78090, 171 CBU 98090, or 171 CBU 98091 processor can execute only one of these blocks at a time per channel. If your program contains multiple blocks of this type, you may need to insert a delay into your program – or test the `DONE` output before activating another block. In this way, you can avoid the simultaneous execution of these blocks.

Configuring the Port Number Parameter for XXMIT and L9_XMIT

When specifying a port number for the L9_XMIT and XXMIT blocks, use the appropriate channel setting for the 171 CBU 78090, 171 CBU 98090, or 171 CBU 98091 processor. Channel setting values are:

- 0, representing the MB1/channel 0 configurable RS232/RS485 serial port
- 1, representing the MB2/channel 1 fixed RS485 serial port

Location of Output Data from the XXMIT Block

Momentum Unity writes `XXMIT` block output data to the memory location specified in word 5 of the `MsgOut` parameter. In this respect, Momentum Unity `XXMIT` block behavior mirrors that of the `L9_XMIT` block in Concept and Proworx.

NOTE: The behavior of the `XXMIT` block for other platforms, for example Quantum, is different than for Momentum Unity. In the case of Quantum, for example, `XXMIT` block output data is written to the location specified by the `MsgIn` parameter.

State RAM Objects Index Range for Modbus Server

The state RAM objects %I, %M, %IW, and %MW each has an index starting at 0. In the CPU configuration screen *(see page 68)*, when the number of objects is entered – for example 256 – the object index range is [0...(number-1)] or in this example [0...255].

Modbus server allows access of state RAM objects starting at index 1, for example [1...255]. Therefore, if you want to have 256 objects accessible with Modbus requests, you need to enter 257 in the CPU configuration screen *(see page 68)*.

Locating 32-Bit Words on Even-Numbered Word Boundary

When assigning a 32-bit variable a memory location, or otherwise locating a 32-bit double word, you need to locate the variable or word to begin on an even word boundary.

Section 4.8
Momentum-Specific System Words

Description of System Words %SW128 to %SW152

Detailed Description

⚠ WARNING

UNEXPECTED APPLICATION BEHAVIOR

Do not use system objects (%Si, %SWi) as variable when they are not documented.

Failure to follow these instructions can result in death, serious injury, or equipment damage.

Description of system words %SW128 to %SW152 on Momentum processors

Word Symbol	Function	Description	Initial State
%SW128... %SW129	I/O-Bus module health	%SW128.0 is module #1 health; %SW129.15 is module #32 health. If a health bit is set to: ● 0 = the module is not healthy or the module is not configured ● 1 = the module is healthy	0

%SW132	I/O compatibility detected error status	**NOTE:** The content of this word is significant only if %S118 is set to 1.
		Meaning of the different bits of the word %SW132.0 to %SW132.15:
		● %SW132.0 to %SW132.14: These bits contain a value from 1 to 64, signifying the network position of the module that cannot be reached. For example, a value of 8 indicates a detected communications failure in accessing the eighth module on the network.
		● %SW132.15:
		  ● %SW132.15 = 0 indicates a detected general communication stoppage; for example: no power to the module or a break in its input cable.
		  ● %SW132.15 = 1 indicates that communication is possible, but the I/O bus ID received from the module does not match the module type contained in the configuration for that position.
			0

Word Symbol	Function	Description	Initial State
%SW134	I/O-Bus detected error	Meaning of the values of the word %SW134: ● 0 = no error detected ● 1 = module ID mismatch ● 2 = I/O base detected error ● 3 = missing modules or extra module ● 4 = bus exchange detected error **NOTE:** %SW134 stores the last detected error. The system does not automatically reset this word to 0 when the cause of the detected error o longer exists. You need to set this word to 0 after resolving the cause of the detected error.	0
%SW135	Local I/O detected error	Meaning of the values of the word %SW135: ● 0 = no error detected ● 1 = read local I/O base ID detected error ● 2 = I/O base ID does not match the application configuration ● 3 = I/O base detected errors **NOTE:** %SW135 stores the last detected error. The system does not automatically reset this word to 0 when the cause of the detected error o longer exists. You need to set this word to 0 after resolving the cause of the detected error.	0
%SW137	Modbus slave address - serial port 2	Read-only system word containing the Modbus slave address for serial port number 2. **NOTE:** Applies to Momentum processors with 2 serial ports, for example the 171 CBU 78090.	0
%SW138	Messages transmitted - serial port 2	Read-only system word containing the number of messages transmitted to serial port number 2. **NOTE:** Applies to Momentum processors with 2 serial ports, for example the 171 CBU 78090.	0
%SW139	Messages received - serial port 2	Read-only system word containing the number of messages received by serial port number 2. **NOTE:** Applies to Momentum processors with 2 serial ports, for example the 171 CBU 78090.	0
%SW141... %SW142	IP netmask	These words contain the following data: ● %SW141: the IP subnet mask low octets ● %SW142: the IP subnet mask high octets **NOTE:** Applies to Momentum processors with an Ethernet port, for example the 171 CBU 98090 and 171 CBU 98091.	0
%SW143... %SW144	IP gateway	These words contain the following data: ● %SW143: the IP default gateway address - low octets ● %SW144: the IP default gateway address - high octets **NOTE:** Applies to Momentum processors with an Ethernet port, for example the 171 CBU 98090 and 171 CBU 98091.	0

Word Symbol	Function	Description	Initial State
%SW145... %SW147	MAC address	These words contain the following data: ● %SW145: the MAC address - low octets ● %SW146: the MAC address - middle octets ● %SW147: the MAC address - high octets **NOTE:** Applies to Momentum processors with an Ethernet port, for example the 171 CBU 98090 and 171 CBU 98091.	0
%SW148	ETH services status	These words contain the following data: ● %SW148: FDR client status: ● 0 = not initialized ● 1 = IP initialized ● 2 = <not used> ● 3 = link ETH down ● 4 = duplicate IP detected ● 5 = waiting for server ● 6 = no configuration, or configuration detected error	0
%SW151... %SW152	ETH open connection number	These words contain the following data: ● %SW151: the number of open connections in server mode ● %SW152: the number of open connections in client mode	0

Chapter 5
Converting and Importing Legacy Applications

Overview

This chapter describes how to use Unity Pro to:

- Convert and import a legacy Momentum application, developed in Proworx, Concept, or Modsoft, to a Unity Pro application.
- Identify those parts of your legacy application that you may need to edit in Unity Pro to complete the conversion process.

This chapter also describes how to adapt existing serial port wiring and reconnect it to a replacement 171 CBU 78090, 171 CBU 98090 and 171 CBU 98091 processor.

What Is in This Chapter?

This chapter contains the following topics:

Topic	Page
Importing and Converting Legacy LL984 Applications in Unity Pro	136
Re-Wiring an RS485 4-Wire Serial for 2-Wire Operations	141
RJ45 Cable for RS485 Serial Communication	142

Importing and Converting Legacy LL984 Applications in Unity Pro

Importing Momentum Legacy Applications

Unity Pro can import and convert legacy Momentum applications originally created with other programming software. You can import the following legacy LL984 applications:

- Concept Projects (**.ASC*)
- Modsoft Projects (**.CFG*)
- ProWORX32 Databases (**.PWX*)
- ProWORX Nxt (**.DCF*)

When you import an application to Unity Pro from other programming software, some functions may behave differently.

For example:

- Cold start behavior of Unity Pro LL984 applications is different from legacy LL984 applications.
- Imported Concept IEC coils behave differently than imported LL984 coils.
- Unit Pro MATH functions might not behave the same as legacy LL984 (overflow, underflow, etc.).
- Forced outputs will not retain their forced state in Unity Pro on the occurrence of any one of the following events:
  - cold start
  - application download
  - setting system bit %S0 to 1

  By contrast, forced outputs retain their forced state in Concept, Modsoft and ProWORX projects on the happening of any of these events.

⚠ WARNING

UNINTENDED EQUIPMENT OPERATION

- After you imported an application program, edit the result carefully to check that the logic elements have been ported completely and are located correctly in the program.
- Test the application before running it to check that it performs as expected.
- If necessary, edit the program to add logic elements that are missing, remove code that is not necessary, and replace logic elements that behave differently from their intended purpose.

Failure to follow these instructions can result in death, serious injury, or equipment damage.

Importing Legacy Project Files

To import and convert a legacy project file:

Step	Action
1	In Unity Pro, select **File** →**Open** to display the **Open** dialog: 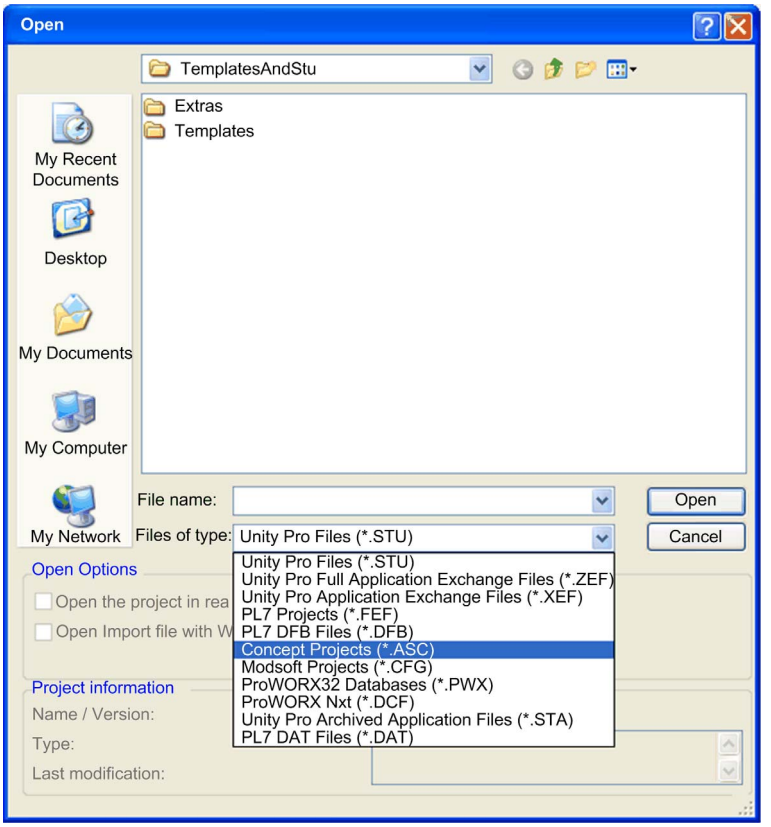
2	Select the desired **File of type**: ● Concept Projects (**.ASC*) ● Modsoft Projects (**.CFG*) ● ProWORX32 Databases (**.PWX*) ● ProWORX Nxt (**.DCF*)
3	Navigate to and select the desired legacy application, then click **Open**. The import process begins.

<table>
<tr><th>Step</th><th colspan="2">Action</th></tr>
<tr><td>4</td><td colspan="2">After a few seconds, the LL984 Options dialog opens.
 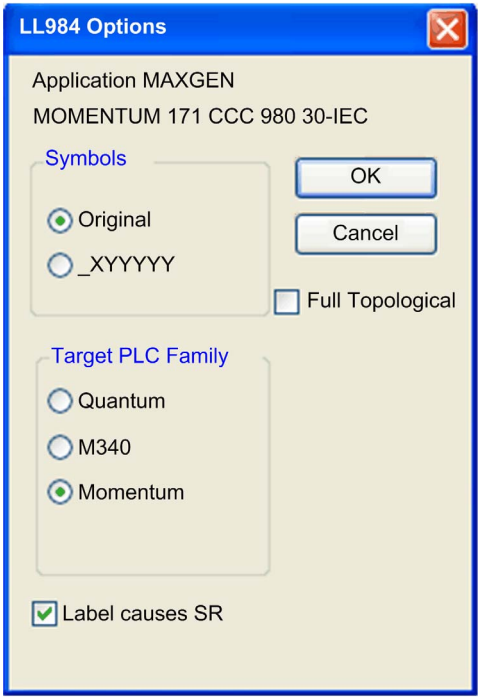

Use the LL984 Options dialog to input settings that will configure the import process, as described below.</td></tr>
<tr><td rowspan="3">5</td><td colspan="2">In the Symbols area, select one of the following:</td></tr>
<tr><td>● Original</td><td>Select this option to use the original variable names of the legacy application in your new Unity Pro application.</td></tr>
<tr><td>● _XYYYYY</td><td>Select this option to automatically convert the legacy variable names. The new variable names will be composed according to the following list:
● _: an underscore will be the leading sign of the converted variables.
● X: represents the data type in the memory area.
  ● 0: %M (memory bit)
  ● 1: %I (discrete input)
  ● 3: %IM (input word)
  ● 4: %MW (memory word)
● YYYYY: represents the address number.
For example _400001 stands for%MW1.</td></tr>
</table>

Step	Action
6	In the **Target PLC Family** area, select **Momentum**.
7	Select the **Label causes SR** checkbox, to import a segment containing labels as an SR segment, even if its scheduling does not express this. Labels are allowed only in SR segments.
8	Click **OK** to save your settings. The options dialog closes. **NOTE:** The **Full Topological** selection does not apply to Momentum projects. Momentum uses State RAM addressing.
9	If the legacy application contains custom data types, the following dialog opens: 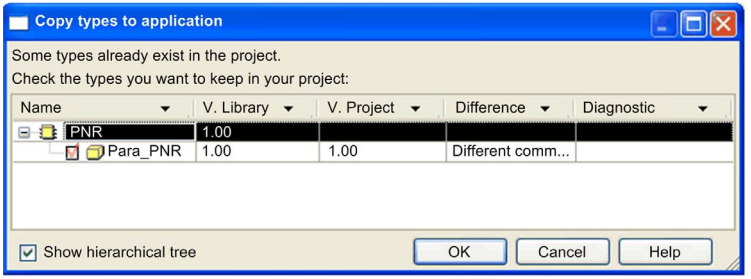
10	Select **Show hierarchical tree** to expand the list of types.
11	Select each type to include in the imported project.
12	Click **OK** to save your settings. The dialog closes.
13	When the import process is complete, the following dialog displays: When the import process is complete, the following dialog displays: 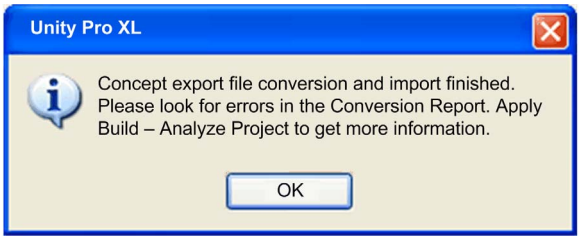
14	Click **OK** to close the dialog.

Post Import Clean-up

The import process may not successfully convert every element of the legacy application. In this case, you need to manually edit the application to complete the conversion process.

Use the tabs in the Unity Pro **Output Window** to determine what manual edits you need to make to complete conversion of the legacy application:

- After the import process finishes, the **Import/Export** tab of the Unity Pro **Output Window** displays a message for each legacy application element. If the message is the color:
  - gray: the item converted successfully
  - red: the item was not converted successfully
  - blue: this text describes the cause of the item in red above it
- Use the **Build →Analyze Project** command to determine if your edits resolved the detected conversion errors. The **Analyze Project** tab of the Unity Pro **Output Window** displays any detected errors.
- Use the **Build →Rebuild All Project** command to build the application. Unity Pro displays any detected errors in the **Rebuild All Project** tab of the Unity Pro **Output Window**.
- Use the **Build →Build Changes** commands to build your edits to the application. The **Build Changes** tab of the Unity Pro **Output Window** displays any detected errors.
  When you double-click a blue text message in the **Output Window**, Unity pro opens a window displaying the source of the detected problem.

Unity Pro logs the conversion process, and stores the log file in the same location as the original legacy application file. You can examine the log file to locate the legacy application elements that need to be manually converted.

Re-Wiring an RS485 4-Wire Serial for 2-Wire Operations

Re-Wiring the Serial Port

The serial ports on the 171 CBU 78090, 171 CBU 98090 and 171 CBU 98091 processors support 2-wire RS485 communication. Some existing Momentum networks may include devices that employ 4-wire RS485 communication. In such cases, you need to convert the existing 4-wire connections to 2-wire connections at the processor.

The solution is:

- join together the Tx+ and Rx+ signals, then connect them to pin 3 (D1) of an RJ45 serial port connector on the processor
- join together the Tx- and Rx- signals, then connect them to pin 6 (D0) of an RJ45 serial port connector on the processor
- connect the single-wire Gnd signal to pin 5 (Gnd) of an RJ45 serial port connector on the processor

These wiring changes are depicted, below:

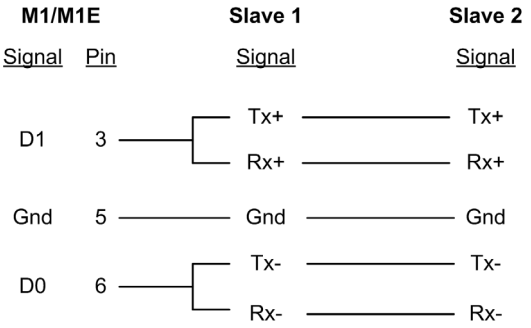

Every other pin on the processor RJ45 serial port connector *(see page 28)* is reserved, except for pin number 8, to which a cable shield is connected if you are using shielded wiring.

RJ45 Cable for RS485 Serial Communication

RJ45 to RJ45 RS485 Communication Cable

To support serial RS485 communications on the 171 CBU 78090, 171 CBU 98090, or 171 CBU 98091 processors, you can use the Schneider Electric TCSMCN3M3M3S2 RJ45 to RJ45 Modbus cable to connect to a remote Momentum device.

The TCSMCN3M3M3S2 cable has a length of 2 m and presents the following wiring profile:

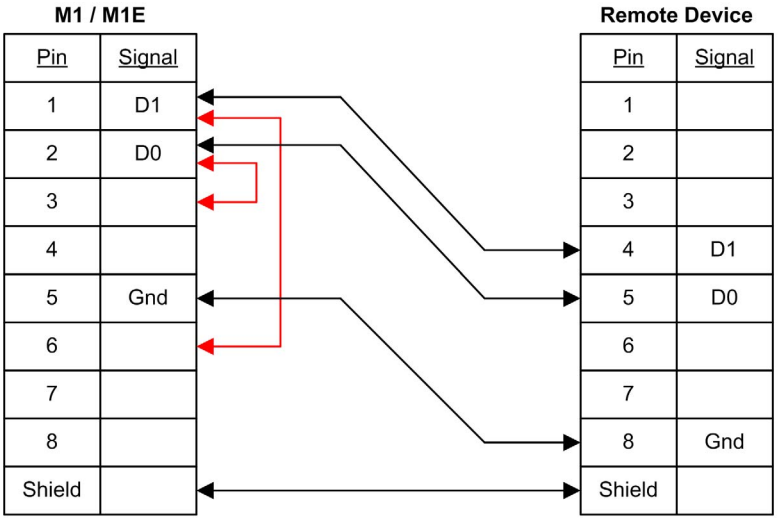

Chapter 6
Diagnostics and Maintenance

Overview

This chapter addresses the following tasks:

- How to diagnose the state of the processor adapter using the LEDs.
- How to monitor and diagnose the processor adapter using the embedded web pages.
- How to upgrade the processor adapter firmware using the Unity Loader software.
- How to help stabilize the CPU and I/O base installation using the Schneider Electric high vibration kit.

What Is in This Chapter?

This chapter contains the following sections:

Section	Topic	Page
6.1	LED Diagnostics	144
6.2	Web Server Diagnostics	150
6.3	Upgrading Firmware for the 171 CBU 78090, 171 CBU 98090 and 171 CBU 98091 Processors	171
6.4	Reinforcing the Assembly in a High Vibration Environment	176

Section 6.1
LED Diagnostics

Overview

Use the LEDs on the front of the 171 CBU 78090, 171 CBU 98090 and 171 CBU 98091 processors to monitor and diagnose the state of the CPU and CPU communications.

What Is in This Section?

This section contains the following topics:

Topic	Page
171 CBU 78090, 171 CBU 98090 and 171 CBU 98091 CPU Status LEDs	145
171 CBU 78090, 171 CBU 98090 and 171 CBU 98091 Communication Status LEDs	146
CPU Status Detected Error Codes	148

171 CBU 78090, 171 CBU 98090 and 171 CBU 98091 CPU Status LEDs

CPU Status LEDs

The LED panel on the 171 CBU 78090, 171 CBU 98090 and 171 CBU 98091 processors includes the following LEDs you can use to diagnose the CPU status:

- RUN (green)
- ERR (red)
- I/O (red)

Diagnosing the CPU Status

The state of each of these 3 LEDs–blinking, ON, or OFF–collectively describe the CPU status, as follows:

RUN	ERR	I/O	CPU State
Blinking[1]	Blinking[1]	Blinking[1]	The CPU is booting, or is performing power-up self tests, or detects a missing or invalid OS.
OFF	Blinking[1]	OFF	The CPU is not configured.
Blinking[1]	OFF or Blinking[1]	OFF or ON	A valid application is in the CPU. The CPU is in stop state. ● A blinking ERR LED indicates that a minor CPU error *(see page 149)* has been detected. The processor can continue to operate. ● Solid ON I/O LED indicates a local I/O error *(see page 148)* or an I/O-Bus error *(see page 148)* has been detected.
ON	OFF or Blinking[1]	OFF or ON	The CPU is in run mode.
Blinking[1]	ON	OFF	A firmware transfer is in progress.
1. ON for 250 ms, OFF for 250 ms, repeated continuously.			

171 CBU 78090, 171 CBU 98090 and 171 CBU 98091 Communication Status LEDs

Communication Status LEDs

The LED panel on the 171 CBU 78090 (M1) *(see page 15)* processor includes the following LEDs you can use to diagnose the state of communication over the 2 serial ports:

- MB1 CH0 (yellow)
- MB2 CH1 (yellow)

The LED panel on the 171 CBU 98090 (M1E) and 171 CBU 98091 (M1E-GD) processors *(see page 19)* includes the following LEDs you can use to diagnose the state of communication over the serial and Ethernet ports:

- MB1 CH0 (yellow)
- ETH STS (green)
- ETH LNK/ACT (green)
- ETH 100 (green)

Diagnosing Communication Status

The state of each of these LEDs describes the communication status for each processor, as follows:

LED	Processor		Flash Pattern	Communication State
	M1	M1E & M1E-GD		
MB1 CH0	X	X	Flashing[1]	Data exchange (RX or TX) on the configurable RS232/RS485 serial port (channel 0) in progress
			OFF	No data exchange on the serial connection
MB2 CH1	X		Flashing[1]	Data exchange (RX or TX) on fixed RS485 serial port (channel 1) in progress
			OFF	No data exchange on the serial connection
ETH STS		X	ON	Communication OK
			2 flashes[2]	Invalid MAC address
			3 flashes[2]	Ethernet link not connected
			4 flashes[2]	Duplicate IP address
			5 flashes[2]	Waiting for served IP address
			6 flashes[2]	Operating using default IP address

1. ON for 200 ms, OFF for 200 ms, repeated continuously.
2. ON for 200 ms, OFF for 200 ms, repeated N times, followed by ON for 1000 ms.

LED	Processor		Flash Pattern	Communication State
	M1	M1E & M1E-GD		
ETH LNK/ACT		X	ON	Ethernet link detected – no communication activity
			OFF	No Ethernet link detected
			Flashing	Data exchange on the Ethernet link in progress
ETH 100		X	ON	Ethernet transmission at 100 Mbits/s (fast Ethernet)
			OFF	Ethernet transmission at 10 Mbits/s, or no Ethernet link detected

1. ON for 200 ms, OFF for 200 ms, repeated continuously.
2. ON for 200 ms, OFF for 200 ms, repeated N times, followed by ON for 1000 ms.

CPU Status Detected Error Codes

Introduction

The 171 CBU 78090, 171 CBU 98090 and 171 CBU 98091 processors can detect errors during run-time. There are 4 types of reported detected errors:

- Local I/O detected errors
- I/O-Bus detected errors
- Minor CPU detected errors
- Major CPU detected errors

Local I/O Detected Errors

A local I/O error is detected when:

- The processor cannot read the ID of the I/O base.
- The ID of the local I/O base does not match the configured I/O base.
- The I/O base triggers the detection of an error

If a local I/O error is detected, the **RUN** LED blinks ON and OFF, and the **ERR** LED is ON.

When a local I/O error is detected, the current I/O transmission is dropped.

The cause of a detected local I/O-Bus error is stored in the register located at %SW135 with the following values:

- 0 = no detected error
- 1 = error detected while attempting to read the I/O base ID
- 2 = I/O base mismatch detected (the I/O base ID does not match the I/O base ID in the application)
- 3 = I/O base errors detected

I/O-Bus Detected Errors

An I/O-Bus error is detected when one of the following events occurs:

- The ID of the remote processor does not match the configured processor ID.
- The I/O base triggers the detection of an error.
- The processor detects a missing or extra processor on the I/O-Bus.
- The processor detects an I/O-Bus exchange error.

The cause of a detected I/O-Bus error is stored in the register located at %SW134 with the following values:

- 0 = no detected error
- 1 = module ID mismatch
- 2 = I/O base errors detected
- 3 = missing or extra module
- 4 = detected bus exchange error

The processor also provides a compatibility status in a register located at %SW132, which is significant only when %S118 is set to 1. The compatibility status register can have the following values:

- bits 0 to 14: Contain a value from 1 to 64, which indicates the network position of the module that cannot be reached.
- bit 15:
  - A value of 0 indicates a general communication interruption.
  - A value of 1 indicates that communication with a module is possible, but the detected module is not of the configured module type.

Minor CPU Detected Errors

A minor CPU error is detected when the processor enters the Halt state. No action is needed to clear a minor detected error. The processor can continue to operate.

When a minor CPU error is detected, both the **RUN** and **ERR** LEDs blink ON and OFF.

Major CPU Detected Errors

When a major CPU error is detected, the processor enters the Stop state. The processor cannot continue to operate. A major CPU detected error can have many causes.

For diagnosing detected errors, use the following system words:

- %SW125: last detected error
- %SW126 and 127: address of the program instruction that generated the detected error

For a description of system bits and words, including detected error descriptions, refer to the System Bits and System Words topic in Unity Pro help.

When a major CPU error is detected the **RUN** LED is OFF, and both the **ERR** and **IO** LEDs remain ON.

To clear a major detected CPU error, you need to cycle power to the processor. The processor performs a cold start, and restarts in Stop state.

Section 6.2
Web Server Diagnostics

Embedded Web Server

The 171 CBU 78090, 171 CBU 98090 and 171 CBU 98091 processors provide an embedded web server. Use the web server to display real-time diagnostic data for both the processor and other networked devices.

To access the web pages:
- on the 171 CBU 78090: Use the USB port.
- on the 171 CBU 98090 or 171 CBU 98091: Use either the USB port or the Ethernet port.

The collection of web pages depends upon the specific processor, as follows:

Web Page	Processor		
	171 CBU 78090	171 CBU 98090	171 CBU 98091
Home *(see page 152)*	X	X	X
Diagnostics *(see page 153)*	X	X	X
CPU Status *(see page 154)*	X	X	X
Ethernet Statistics *(see page 164)*	–	X	X
Global Data *(see page 158)*	–	–	X
I/O Scanning *(see page 160)*	–	X	X
Messaging *(see page 162)*	–	X	X
Bandwidth Monitoring *(see page 163)*	–	X	X
Properties *(see page 167)*	X	X	X
Monitoring *(see page 168)*	–	X	X
Data Viewer *(see page 169)*	–	X	X
X indicates the processor includes the specified web page. – indicates the processor does not include the specified web page.			

NOTE: Web pages are read-only.

What Is in This Section?

This section contains the following topics:

Topic	Page
Accessing the Home Page	152
Diagnostics Web Page	153
CPU Status Web Page	154
Global Data Web Page	158
IO Scanning Web Page	160
Messaging Web Page	162
Bandwidth Monitoring Page	163
Ethernet Statistics Web Page	164
Properties Web Page	167
Monitoring Web Page	168
Data Viewer Web Page	169

Accessing the Home Page

Connecting to the Home Page

Navigating the pages of the embedded web server begins by connecting to the **Home** page.

To connect to the **Home** page:

Step	Action
1	Connect a PC with an Internet browser to the processor. If the processor is an: ● 171 CBU 78090: Connect the PC to the USB port. ● 171 CBU 98090 or 171 CBU 98091: Connect the PC to either the USB port or the Ethernet port.
2	Open an Internet browser on the PC.
3	● If your PC is connected to the Ethernet port: ● Type in the IP address of the processor *(see page 36)*. **NOTE:** Use a PC that has been assigned an IP address with the same network address component as the IP address of the processor. ● If your PC is connected to the USB port: ● Type 90.0.0.1 as the URL.
4	Press **Enter** on your keyboard. The **Home** page opens in your browser.

To navigate to other web pages, where you can monitor the operation of the processor, select the following main menu commands:

- Monitoring *(see page 168)*
- Diagnostics *(see page 153)*

Diagnostics Web Page

Using the Diagnostics Page

After connecting to the **Home** page *(see page 152)*, select **Diagnostics** in the main menu to open that web page.

Select one of the following links at the left side of the page to open that read-only diagnostics page:

- CPU Status *(see page 154)*
- Ethernet:
  - Statistics *(see page 164)*
  - IO Scanning *(see page 160)*
  - Messaging *(see page 162)*
- Properties *(see page 167)*

CPU Status Web Page

Introducing the CPU Status Page

Use **CPU Status** page to view CPU information, including:

- LEDs status
- processor identification
- processor operating status
- status of local and networked I/O
- application identification
- select application configuration settings

Accessing the CPU Status Page

Access the **CPU Status** page from the **Diagnostics** *(see page 153)* menu. In the navigation menu at the left side of the page, select **Diagnostics** →**CPU Status**.

An example of the **CPU Status** page:

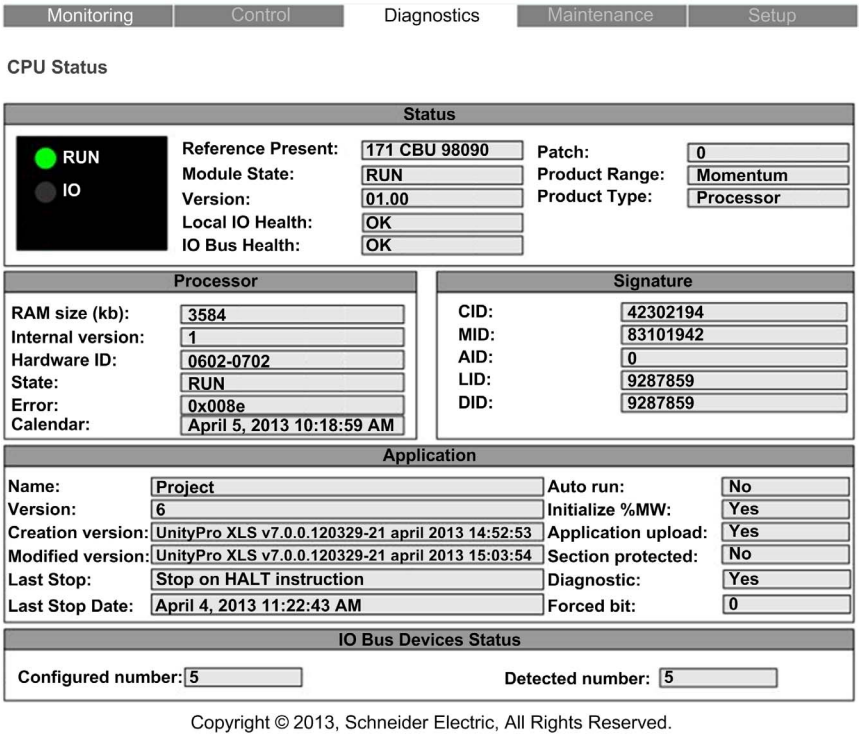

CPU Status Data

The **CPU Status** page displays the following data:

Data Field	Description
Status	
Reference Present	The processor description: ● 171 CBU 78090 ● 171 CBU 98090 ● 171 CBU 98091
Module State	One of the following states: ● NO CONFIGURATION ● IDLE ● STOP ● RUN ● HALT ● INITIALIZING ● ERROR ● OS LOADER
Version	Module version
Local IO Health	The state of system bit %S119: ● OK ● NOK
IO Bus Health	The state of system bit %S118: ● OK ● NOK
Patch	The version of the firmware patch, if any: ● 0 = no patch ● 1 = version A ● 2 = version B ● ...
Product Range	The processor family: a constant value of M1
Product Type	Processor (fixed value)
Reference Configured	The processor specified in the application: ● M1 ● M1E ● M1E-GD
Processor	
RAM size (kb)	The size of processor RAM in KB
Internal version	Firmware version
Hardware ID	An identifier for the module hardware. OS Loader checks this value to determine compatibility between the hardware and the operating system.

Data Field	Description
State	The operating state of the processor: ● NO CONFIGURATION ● IDLE ● STOP ● RUN ● HALT ● INITIALIZING ● ERROR ● OS LOADER
Error	The identity of the last detected error
Calendar	Date and time of last detected error
Signature	
CID	*Creation ID*: Random number generated when an application is created. The number remains a constant.
MID	*Modification ID*: Random number generated on each application modification and rebuild, either partial or global. When an application is created, MID = CID.
AID	*AutoModification ID*: A new random value is generated for AID by the PLC after one of the following minor modifications to the application: ● a Unity request to modify %KW ● a P_Unit request that performs a save_param request or replaces init value When an application is created or built in local mode, AID = 0.
LID	*Layout ID*: Random number generated after a modification of the variable layout. LID does not change as a result of a runtime change either adding or deleting a data block.LID changes only on when the global rebuild of the application. LID addresses the needs of Hot Standby. It permits the transfer of a memory block from the primary PLC to the standby so that application variables (except for deleted or new ones) exist at the same location. LID = CID = MID when the application is created.
DID	*Data ID*: Indicates that a block of data has been freed. Also used for the special case of remapping a symbol from unlocated to located.
Application	
Name	Name of the Unity Pro project
Version	Project version
Creation version	Includes both: ● Version and build of Unity Pro used to create the project. ● Date and time the project was created.

Data Field	Description
Modified version	Includes both: ● Version and build of Unity Pro used to edit the project. ● Date and time the project was last edited.
Last Stop	The event that last caused the application to stop. Values include: ● Changeover from RUN to STOP by the terminal or dedicated input ● Stop on software detected fault (task overrun or SFC overrun) ● Power loss detected ● Stop on hardware detected fault ● Stop on HALT instruction
Last Stop Date	Date an event last caused the application to stop.
Auto run	The state of the **Automatic Start in RUN** setting: ● **Yes** indicates that the processor is configured to start in RUN mode after a cold restart. ● **No** indicates that the option is not selected in the processor configuration.
Initialize %MW	The state of the **Initialize %MWi on cold start** setting: ● **Yes** indicates that the processor is configured to initialize the %MWi internal words on a cold start. ● **No** indicates that the option is not selected in the processor configuration.
Application upload	Indicates if the application in PLC memory has additional information (that is, comments) when uploading.
Section protected	Indicates if password access is required to edit one or more sections of the application: ● **Yes** indicates that a password is required to edit specified sections of the application. ● **No** indicates that no password is required for application editing.
Diagnostic	Indicates if the diagnostic buffer has been activated for the project: ● **Yes** indicates that **Application diagnostics** and/or **System diagnostics** has been selected in the **General** → **PLC Diagnostics** tab of the **Project Settings** dialog for the application. ● **No** indicates **Application diagnostics** and **System diagnostics** have not been selected.
Forced bit	The number of forced bits in the application
IO Bus Devices Status	
Configured number	The number of I/O devices on the I/O-Bus that are configured in the application.
Detected number	The number of I/O devices on the I/O-Bus that have been detected by the processor.

Global Data Web Page

Introducing the Global Data Page

The 171 CBU 98091 includes the **Global Data** diagnostic web page.This page contains diagnostic data describing the status of the **Global Data** service.

Accessing the Global Data Page

Access the **Global Data** page from the **Diagnostics** *(see page 153)* menu. In the navigation menu at the left side of the page, select **Diagnostics** →**Ethernet** →**Global Data**.

An example of the **Global Data** page:

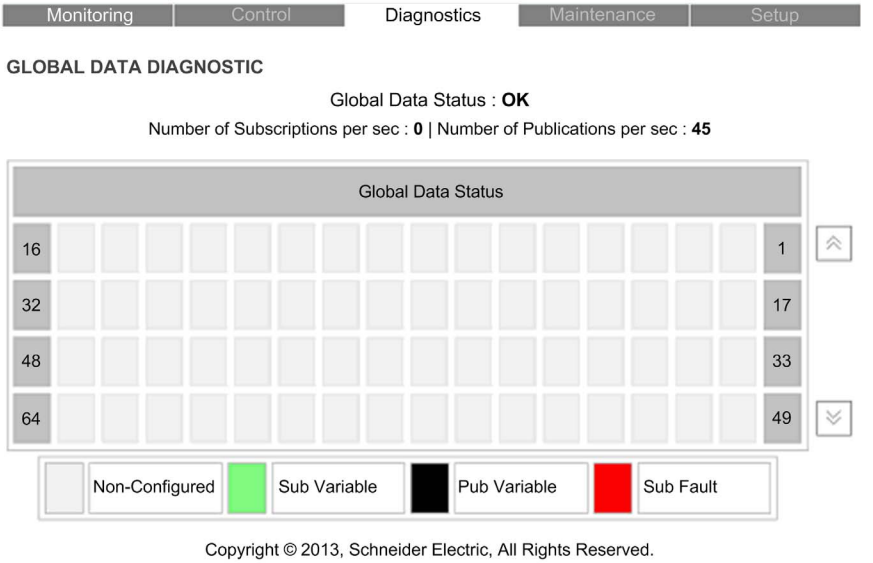

The top of this page displays the following read-only diagnostic data for the **Global Data** service:

- Global Data Status indicates the status of the service:
  - OK = operational
  - NOK = not operational
- Number of Subscriptions per second
- Number of Publications per second

The **Global Data** page also presents a table representing the nodes in the Global Data distribution group. The color of each table cell indicates the **Global Data** status of that node:

Color	Variable Status
green	subscribed variable

Color	Variable Status
black	published variable
white	no published variable and no subscribed variable
red	detected communication error for a node that has subscribed to a variable

IO Scanning Web Page

Introducing the IO Scanning Page

The **IO Scanning** page displays read-only data describing the current state of the processor in its role as I/O scanner.

Accessing the IO Scanning Page

Access the **IO Scanning** page from the **Diagnostics** *(see page 153)* menu. In the navigation menu at the left side of the page, select **Diagnostics** →**Ethernet** →**IO Scanning**.

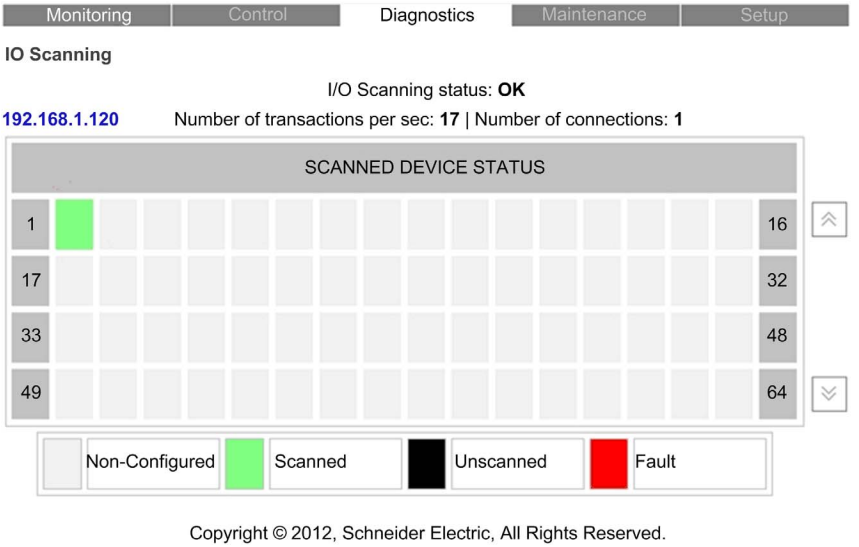

Copyright © 2012, Schneider Electric, All Rights Reserved.

IO Scanner Display

The top of the page displays the following general diagnostic information about the scanner:

- **I/O Scanning status**:
  - **OK** indicates that the values in the **Scanned Device Status** grid represent the state of scanned devices.
  - **NOK** indicates that the processor is not scanning. In this case, any data that appears in the grid is meaningless.
- **Number of transactions per second**
- **Number of connections**

In the **Scanned Device Status** grid, the colors that appear in each block indicate the following states for specific remote devices:

- GREEN indicates that a device is being scanned.
- BLACK indicates that I/O Scanning of the specific device has been intentionally disabled.

- GRAY indicates a device that is not configured.
- RED indicates a suspect device.

When you place your mouse pointer on a block representing a configured remote device, its IP address is displayed on the top left of the table. When you select a block representing a configured remote device, the home page of the device is displayed (if the device includes an embedded web server).

Messaging Web Page

Introducing the Messaging Page

The **Messaging** page provides dynamically updated data about the open TCP connections on port 502.

Accessing the Messaging Page

Access the **Messaging** page from the **Diagnostics** *(see page 153)* menu. In the navigation menu at the left side of the page, select **Diagnostics** →**Ethernet** →**Messaging**.

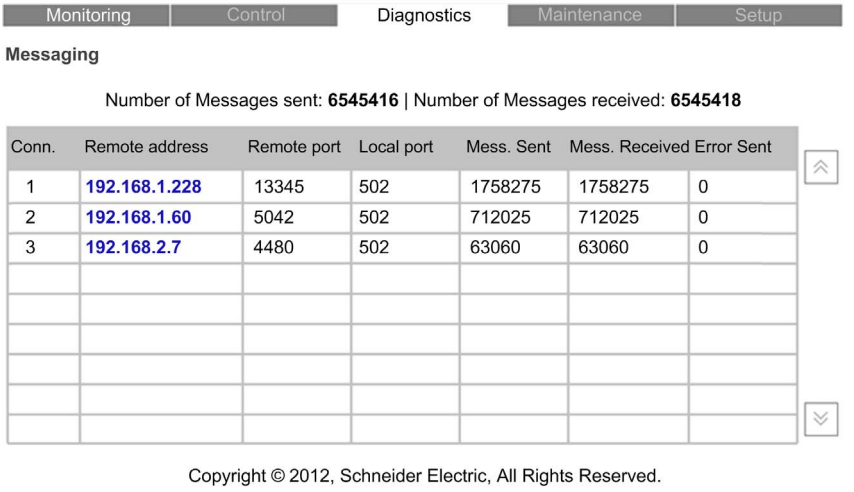

Messaging Page Display

The **Messaging** page provides the following information about each active connection

Property	Description
Connection	The connection number: 1...64
Remote address	The IP address of the remote device **NOTE:** If the remote device includes an embedded web server, click the **Remote address** value to open that server and view the remote device web pages.
Remote port	The TCP port for the connection on the remote device
Local port	The TCP port for the connection on the processor
Messages Sent	The number of messages transmitted over this connection
Messages Received	The number of messages received by this connection
Error Sent	The number of errors detected on this connection

Bandwidth Monitoring Page

Introducing the Bandwidth Monitoring Page

The **Bandwidth Monitoring** page provides dynamically updated data about the current usage of Ethernet bandwidth.

Accessing the Bandwidth Monitoring Page

Access the **Bandwidth Monitoring** page from the **Diagnostics** *(see page 153)* menu. In the navigation menu at the left side of the page, select **Diagnostics** →**Ethernet** → **Bandwidth Monitoring**.

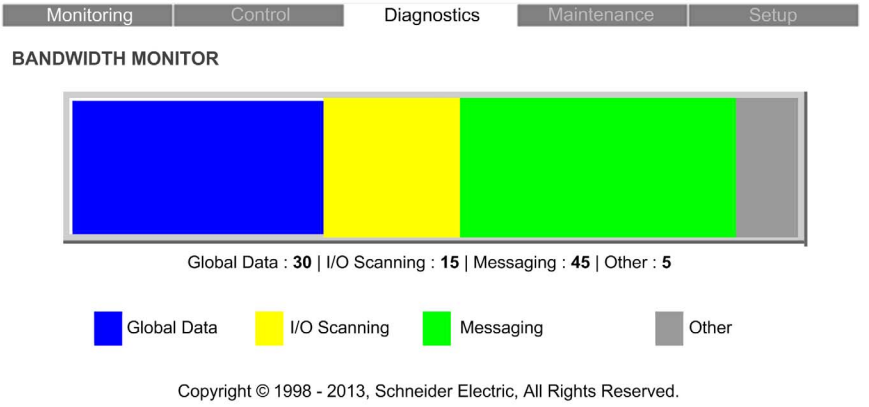

Bandwidth Monitoring Page Display

The **Bandwidth Monitoring** page presents the current percentage usage of Ethernet bandwidth, in both text and bar graph format:

Color	The percentage of bandwidth used by...
Blue	Global Data messages
Yellow	I/O Scanning messages
Green	Modbus Messaging
Gray	Other messages, or not used

Ethernet Statistics Web Page

Introducing the Ethernet Statistics Page

Use the **Ethernet Statistics** page to:

- Display the Ethernet parameters for the processor adapter, including:
  - MAC address
  - device name
  - IP address
  - subnet mask
  - gateway (address)
- Display Ethernet statistics for packets, including:
  - received packets
  - transmitted packets
  - collisions
- Reset counting statistics to zero by clicking the **Reset Counters** button.

Accessing the Ethernet Statistics Page

Access the **Ethernet Statistics** page from the **Diagnostics** *(see page 153)* menu. In the navigation menu at the left side of the page, select **Diagnostics** →**Ethernet** →**Statistics**.

An example of the **Ethernet Statistics** page for the 171 CBU 98090 and 171 CBU 98091 processors:

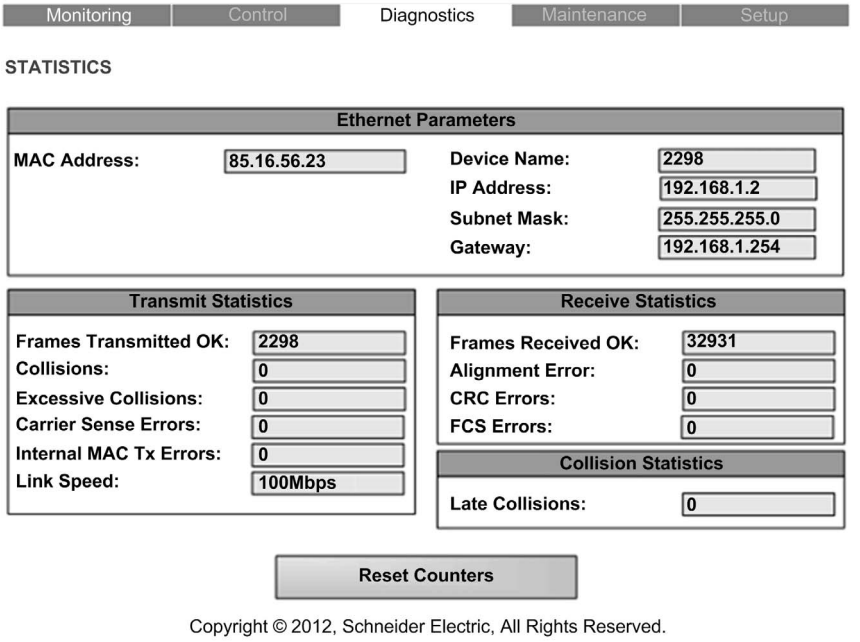

Ethernet Statistics Data

The **CPU Status** page displays the following data:

Data Field	Description
Ethernet Parameters	
MAC Address	The factory assigned media access control (MAC) address, consisting of 6 hexadecimal octet values.
Device Name	The name assigned to the processor by the application
IP Address	The Internet protocol (IP) address that has been assigned to the processor.
Subnet Mask	The subnet mask that has been assigned to the processor.
Gateway	The MAC address of the remote device, if any, that serves as a gateway to the processor on the Ethernet network
Transmit Statistics	
Frames transmitted OK	The number of frames that have been successfully transmitted (since power was last cycled to the processor or the **Reset Counters** button was last pressed).

Data Field	Description
Collisions	The number of times a collision between 2 successfully transmitted packets was detected on the Ethernet link (since power was last cycled to the processor or the **Reset Counters** button was last pressed).
Excessive Collisions	The number of times the processor stopped trying to transmit a packet after 16 attempts, due to repeated collisions (since power was last cycled to the processor or the **Reset Counters** button was last pressed).
Carrier Sense Errors	The number of times that a transmission was interrupted because the Ethernet link was not present during an attempted transmission (since power was last cycled to the processor or the **Reset Counters** button was last pressed).
Internal MAC Tx Errors	The number of frames for which transmission was interrupted due to an internal MAC sublayer transmit detected error (since power was last cycled to the processor or the **Reset Counters** button was last pressed).
Link Speed	The speed of the Ethernet link: ● 10Mpbs ● 100 Mbps
Receive Statistics	
Frames Received OK	The number of frames that have been successfully received (since power was last cycled to the processor or the **Reset Counters** button was last pressed).
Alignment Error	The number of mis-aligned packets with at least one of the following (since power was last cycled to the processor or the **Reset Counters** button was last pressed): ● The number of bits in the received packet has an uneven byte count (not an integral multiple of 8). ● The packet has a frame check sequence (FCS) detected error
CRC Errors	The number of times a cyclic redundancy check error was detected on an incoming packet (since power was last cycled to the processor or the **Reset Counters** button was last pressed).
FCS Errors	The number of times a frame check sequence error was detected on an incoming packet (since power was last cycled to the processor or the **Reset Counters** button was last pressed).
Collision Statistics	
Late Collisions	The number of times a collision was detected after the slot time of the channel had elapsed since power was last cycled to the processor or the **Reset Counters** button was last pressed).

Properties Web Page

Introducing the Properties Page

This web page displays read-only data describing the versions of the following features of your processor:

- CPU firmware
- web server
- web site, including the collection of web pages and supporting files that support the display and animation of each web page.

Accessing the Properties Page

Access the **Properties** page from the **Diagnostics** *(see page 153)* menu. In the navigation menu at the left side of the page, select **Diagnostics** →**Properties**.

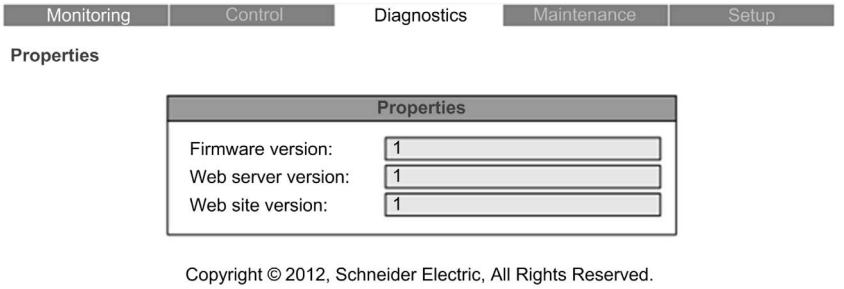

Monitoring Web Page

Using the Monitoring Page

After connecting to the **Home** page *(see page 152)*, select **Monitoring** in the main menu to open that web page.

In this page, you can select **Monitoring** →**Data Viewer** to open the Data Viewer *(see page 169)* page.

Data Viewer Web Page

Introducing the Data Viewer Page

Use the **Data Viewer** page to view a selected range of dynamically changing data at 32 contiguous addresses. Specify the address type and the starting address of the data you wish to view. You can also specify the display format of the data displayed at each address.

Accessing the Data Viewer Page

Access the **Data Viewer** page from the **Monitoring** *(see page 168)* menu. In the navigation menu at the left side of the page, select **Monitoring** →**Data Viewer**.

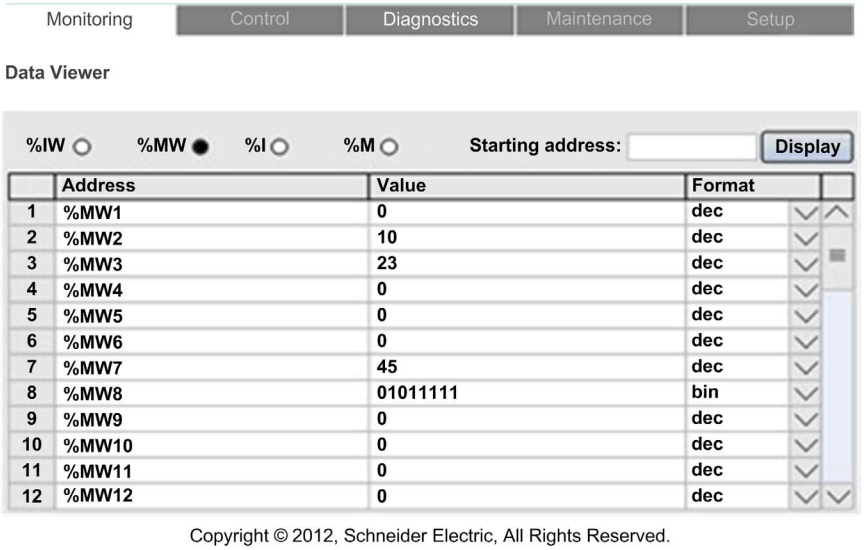

Copyright © 2012, Schneider Electric, All Rights Reserved.

Using the Data Viewer

To use the **Data Viewer**, follow these steps:

Step	Description
1	Select the address type: ● %IW ● %MW ● %I ● %M
2	Type in a **Starting address** value.

Step	Description
3	Click **Display**. The **Data Viewer** displays the value of 32 consecutive address values, beginning at the specified starting address.
4	To specify the display format of data at a specific address, in the **Format** column, select: ● **bin** for binary ● **dec** for decimal ● **hex** for hexadecimal

Section 6.3
Upgrading Firmware for the 171 CBU 78090, 171 CBU 98090 and 171 CBU 98091 Processors

Upgrading Firmware on the 171 CBU 78090, 171 CBU 98090 and 171 CBU 98091 Processors

Using Unity Loader

Use Unity Loader to install firmware upgrades for the 171 CBU 78090, 171 CBU 98090 and 171 CBU 98091 processors. Unity Loader is a stand-alone utility that ships with your Unity Pro software.

Installing Unity Loader

Insert the Unity Loader installation CD in the CD-ROM drive of your maintenance PC. Autorun launches the setup automatically. If not, double-click Setup.exe. The Unity Loader Installation Wizard will guide you through the Unity Loader installation.

Processor Ports

After Unity Loader is installed on your maintenance PC, connect the PC to the processor. You can connect your maintenance PC to the processor using the following processor ports:

Processor	Port
171 CBU 78090	USB port
171 CBU 98090	USB port Ethernet port
171 CBU 98091	

Connecting Unity Loader to the Processor

To establish a connection between Unity Loader and the processor, follow these steps:

Step	Action	
1	Open Unity Loader on your PC: **Start** →**Programs** →**Schneider Electric** →**Unity Loader**. Unity Loader opens and displays the **Project** tab: 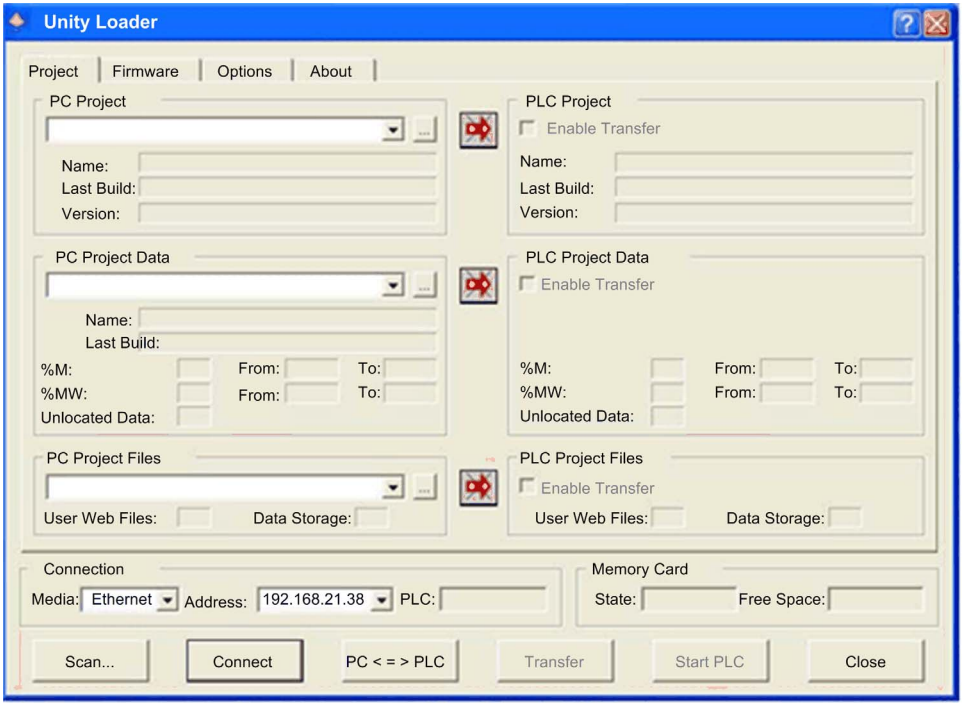	
2	In the **Connection** part of the page, make the following settings:	
	Media	Select either: ● Ethernet (for a 171 CBU 98090 or 171 CBU 98091 processor) ● USB (for a 171 CBU 78090, 171 CBU 98090 or 171 CBU 98091 processor)
	Address	Select or type in the address of the processor, Select or type in the address of the processor, for example: ● SYS (for USB) ● the processor IP address (for Ethernet)
3	Click **Connect**.	

Performing the Upgrade

Before beginning a firmware upgrade, confirm that the processor is in Stop mode.

The firmware upgrade for a processor is contained in a file with an .LDX extension. The single .LDX file contains the necessary processor firmware upgrades.

Each of the 3 versions of the processors requires the use of a unique .LDX file. Before upgrading the firmware, Unity Loader confirms that the firmware upgrade file is compatible with your processor.

Do not interrupt the firmware download process:

- Do not allow an interruption to the power or the communications during the firmware upgrade process.
- Do not shut down the Unity Loader software during the upgrade.

If the firmware download process is interrupted, the new firmware is not installed and the adapter continues to use the old firmware. If an interruption occurs, restart the process.

Open Unity Loader on your PC and update the firmware for the remote I/O adapter:

Step	Action
1	After Unity Loader has connected to the module, click the **Firmware** tab:

Step	Action
2	In the **PC** area, click the ellipsis (**...**) button to open a dialog where you can navigate to and select the firmware file for your Momentum processor. The firmware is contained in a Unity Loader file (.ldx extension). After you select the firmware file and close the dialog, the selected revision of this firmware is displayed in the list on the left, and the current version of the firmware is displayed in the list on the right. 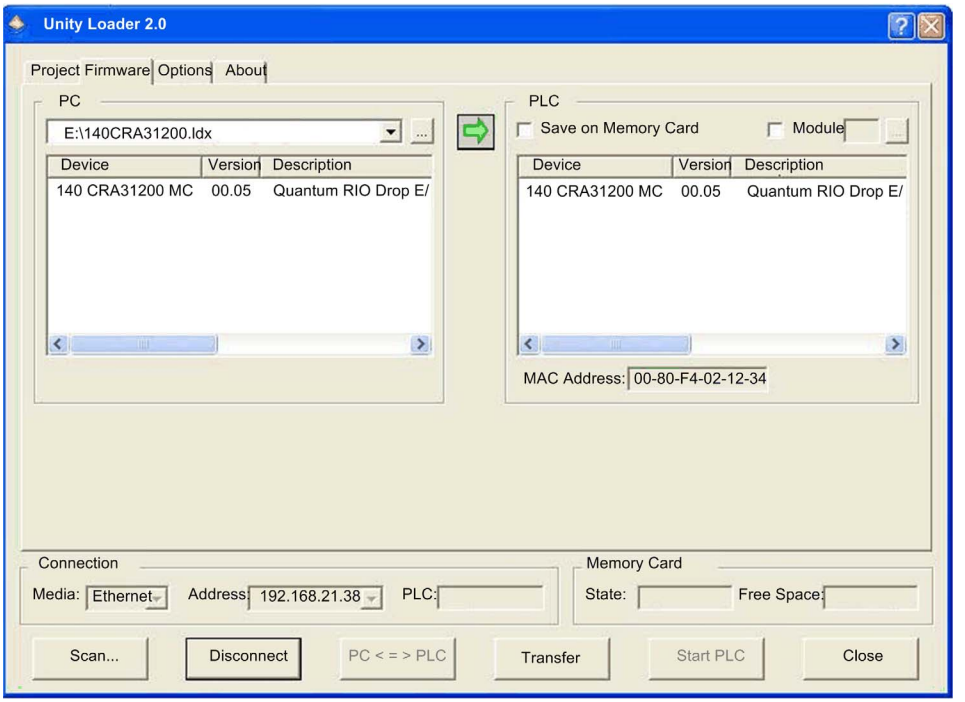
3	When the arrow in the middle of the screen (above) is green, click **Transfer**. **NOTE:** Only click **Transfer** if the arrow is green. A yellow arrow indicates that the firmware file on your computer is the same version or newer than the file selected for transfer; a red arrow indicates that the firmware on the computer is not compatible with the Momentum processor.

Step	Action
4	Click **yes** on the 2 dialogs that appear. A third dialog appears (below), which indicates the transfer status with the blue bars at the bottom of the screen. After the transfer is complete, click **Close**. 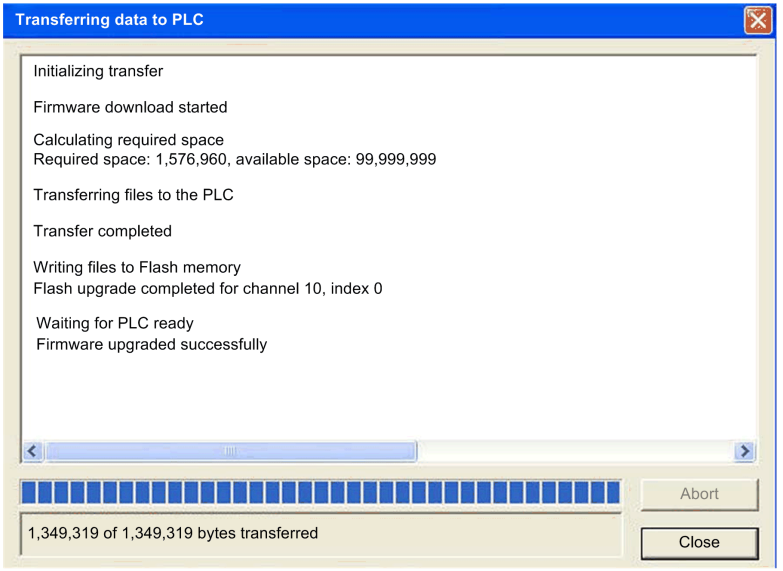
5	In the Unity Loader software, click **Disconnect** and close the window.
6	Reboot the processor to finalize the firmware update.

Unity Loader includes its own user documentation. Refer to the *Unity Loader a SoCollaborative Software User Manual* for assistance when you perform the firmware upgrade.

Section 6.4
Reinforcing the Assembly in a High Vibration Environment

Installing the Processor in a High Vibration Environment

Using the High Vibration Assembly Kit

Schneider Electric offers a kit, product 170 XTS 120 00, that you can use to reinforce the CPU and I/O base assembly in high vibration environments.

You can use the specified kit components in the following circumstances:

Kit Components	Image	Description
two: screws two: receptacles		Use these components to reinforce the I/O base only when the assembly is mounted on a DIN rail: ● Pass each screw from the back of the I/O base through the hole designed for panel mounting. *(see page 57)* ● Place each plastic receptacle into the hole on the front of the I/O base so that it receives a screw. **NOTE:** Do not use these components if your CPU and I/O base are mounted on a panel.
one: 1R connector		Use these components to reinforce the assembly of the CPU to an I/O base that does not include a grille: ● Use a single 1R connector to reinforce the connection between the I/O base and the CPU at the top of the assembly.

Kit Components	Image	Description
one: 3R connector two: 3 connectors	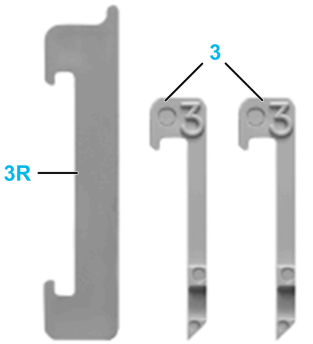	Use these components to reinforce the assembly of the CPU to an I/O base that includes a grille: ● Use a single 3R connector to reinforce the connection between the I/O base and the CPU at the top of the assembly. ● Use 2 number 3 connectors to reinforce the connection between the I/O base and the CPU at the bottom of the CPU.

For detailed installation instructions, refer to Schneider Electric publication 31001589, which is delivered as part of the 170 XTS 120 00 kit.

NOTE: Kit components 2, 2R, 4, and 4R are not used to reinforce the Momentum processors and I/O base assembly.

Appendices

Appendix A
Momentum I/O Bases for the 171 CBU 78090, 171 CBU 98090 and 171 CBU 98091 Processors

Momentum I/O Bases for 171 CBU 78090, 171 CBU 98090 and 171 CBU 98091 Processors

Momentum I/O Bases

The 171 CBU 78090, 171 CBU 98090 and 171 CBU 98091 processors are mounted on a Momentum I/O base. The base provides 5 V power to the processor.

Use Unity Pro to configure the Momentum I/O base units that are listed below.

NOTE: A processor can be mounted on any Momentum I/O base.

The following Momentum I/O base units are supported in Unity Pro:

Module Type	Module Name	Description	Ground Screw[1]
IP20 analog input	170 AAI 030 00	ANALOG INPUT 8 CH.DIFF	X
	170 AAI 140 00	ANALOG INPUT 16 CH.SINGLE	X
	170 AAI 520 40	RTD,TC,MV INPUT 4 CH.DIFF	
IP20 analog output	170 AAO 120 00	ANALOG OUTPUT 4 CH 0-20MA	
	170 AAO 921 00	ANALOG OUTPUT 4 CH 4-20MA	
IP20 digital input	170 ADI 340 00	16 DI 24VDC	X
	170 ADI 350 00	32 DI 24VDC	X
	170 ADI 540 50	115VAC 16 PT INPUT	
	170 ADI 740 50	16 DI 230VAC	
IP 20 Mixed Digital I/O	170 ADM 350 10	16 DI/16 DO 24VDC, 0.5A	X
	170 ADM 350 11	16 DI/16 DO 24VDC,0.5A	X
	170 ADM 350 15	I/O BASE 24VDC TRUE LOW 16PT IN/OUT	X
	170 ADM 370 10	16 I 24V/8 O 24V,2A	X
	170 ADM 390 30	10 DI 24VDC/8 RELAY O	
	170 ADM 690 51	120V 10PT IN/8PT OUT MDL BASE	
	170 ADM 850 10	10-60VDC 16 1/16 O MODULE	X

1. An ‘X’ indicates the I/O base is designed to accept a ground screw connecting the processor to the base *(see page 52)*.

Module Type	Module Name	Description	Ground Screw[1]
IP20 Digital Output	170 ADO 340 00	16 DO 24VDC, 0.5A	X
	170 ADO 350 00	24V DC 32PT OUT MDL BASE	X
	170 ADO 530 50	115 VAC OUT - 8 PT - 2A	
	170 ADO 540 50	115 VAC OUT - 16 PT	
	170 ADO 740 50	230 VAC OUT - 16 PT	
IP20 Counter	170 AEC 920 00	HIGH SPEED COUNTER BASE	X
IP 20 Mixed Analog I/O	170 AMM 090 00	4 AI/2 AO 4 DI/2 DO	X
	170 AMM 110 30	ANALOG/DISCRETE MOMENTUM MODULE	X
IP 20 Mixed Analog/Digital I/O	170 ANR 120 90	6 ANALOG IN, 4 OUT/ 8 DIGITAL IN, 8 OUT	X
	170 ANR 120 91	6 ANLG IN/4 ANLG OUT -10/10V 8 DIG I/O	X
	170 ARM 370 30	10 POINT IN 24VDC 8POINTREL OUT 120VAC PS	X
Branch Interface	170 BNO 671 00	24 VDC I/O BUS (INTERBUS) BRANCH INTERFACE MODULE	

1. An ‘X’ indicates the I/O base is designed to accept a ground screw connecting the processor to the base *(see page 52)*.

Index

Symbols

%SW
  Momentum, *131*

0-9

171 CBU 78090
  communication port locations, *14*
  LEDs, *15*
  specifications, *16*
171 CBU 98090
  communication port locations, *18*
  LEDs, *19*
  specifications, *20*
171 CBU 98091
  communication port locations, *18*
  LEDs, *19*
  specifications, *20*

A

access control list, *111*
agency standards, *21*
assembly
  mounting, *56*
  processor and I/O base, *50*

B

Bandwidth Monitoring, *125*
  properties, *126*

C

certifications, *21*
communication port locations
  171 CBU 78090, *14*
  171 CBU 98090, *18*
  171 CBU 98091, *18*
communication status LEDs, *146*
Concept, *136*
CPU status
  detected error codes, *148*
  LEDs, *145*

D

disassembly
  processor and I/O base, *59*

E

Ethernet cables, *34*
Ethernet port
  features, *32*
  link to an Ethernet network , *102*
  location, *31*
  pin assignment, *34*
Ethernet services
  enabling, *108*

F

firmware
  upgrading, *171*

G

Global Data, *119*
grounding, *58*

H

high vibration kit, *176*

I

I/O Scanning, *114*
  diagnostics, *114*
  parameters, *116*

I/O-Bus
addressing, *46*, *89*
analog modules, *92*
branching, *83*
discrete modules, *93*
I/O module state RAM, *95*
input words, *45*
module health bits, *83*
output words, *45*
transmission speed, *45*
I/O-Bus port
cables, *47*
features, *46*
location, *44*
pin assignment, *47*
IP address
assignment methods, *37*
BOOTP request on power-up, *36*
configured settings, *109*
default, *36*

L

LEDs
171 CBU 78090, *15*
171 CBU 98090, *19*
171 CBU 98091, *19*
communication status, *146*
CPU status, *145*

M

Modbus TCP commands, *113*
Modbus TCP messaging, *111*
Modsoft, *136*
Momentum I/O bases, *181*
Momentum legacy applications
importing into Unity Pro, *136*
Momentum-specific system words, *131*
mounting
DIN rail, *56*
panel, *57*

P

processor default values, *70*
processor maximum values, *70*
processor parameters, *68*
ProWORX Nxt, *136*
ProWORX32, *136*

R

RS485
4-wire to 2-wire conversion, *141*

S

serial link parameters
accessing, *75*
settings, *77*
serial port
locations, *25*
Modbus mode and character mode, *26*
parameters, *26*
pin assignment, *28*
types, *25*
SNMP agent, *123*
properties, *124*
specifications
171 CBU 78090, *16*
171 CBU 98090, *20*
171 CBU 98091, *20*
state RAM viewer, *72*
system words
Momentum, *131*

U

Unity Loader, *171*
Unity Pro
building the I/O-Bus, *84*
creating a new project, *64*
I/O-Bus addressing, *89*
USB cables, *42*

USB port
features, *40*
IP address, *40*
location, *39*
pin assignment, *42*
USB system address, *40*

W

web pages
Bandwidth Monitoring, *163*
CPU status, *154*
Data Viewer, *169*
Diagnostics, *153*
Ethernet statistics, *164*
Home, *152*
I/O Scanning, *160*
Messaging, *162*
Monitoring, *168*
Properties, *167*