DLED8 INSTALLATION INSTRUCTIONS

Thank you for buying RAB lighting fixtures. Our goal is to design the best quality products to get the job done right. We'd like to hear your comments. Call the Marketing Department at 888-RAB-1000 or email: marketing@rabweb.com

IMPORTANT

READ CAREFULLY BEFORE INSTALLING FIXTURE. RETAIN THESE INSTRUCTIONS FOR FUTURE REFERENCE.

RAB fixtures must be wired in accordance with the National Electrical Code and all applicable local codes. Proper grounding is required for safety. THIS PRODUCT MUST BE INSTALLED IN ACCORDANCE WITH THE APPLICABLE INSTALLATION CODE BY A PERSON FAMILIAR WITH THE CONSTRUCTION AND OPERATION OF THE PRODUCT AND THE HAZARDS INVOLVED.

WARNING: Make certain power is OFF before installing or maintaining fixture.

SAFETY INSTRUCTIONS

WARNING – Risk of fire or electric shock. LED Retrofit Kit installation requires knowledge of luminaires electrical systems. If not qualified, do not attempt installation. Contact a qualified electrician.

WARNING – Risk of fire or electric shock. Install this kit only in the luminaires that have the construction features and dimensions shown in the photographs and/or drawings.

WARNING – To prevent wiring damage or abrasion, do not expose wiring to edges of sheet metal or other sharp objects.

WARNING - Only those open holes indicated in the photographs and/or drawings may be made or altered as a result of kit installation. Do not leave any other open holes in an enclosure of wiring or electrical components.

WARNING - Do not make or alter any open holes in an enclosure of wiring or electrical components during kit installation.

EXISTING MOUNTING FRAME

DLED8 is suitable for installation in Non-Insulated Ceilings. Insulation not to be placed over the top of or within 3" of DLED8.

DLED8 can be used in **Existing Mounting Frames** with opening of minimum 7-7/8" (200mm) and maximum of 8-7/8" (225.4mm).

1. Disconnect power to the **Existing Fixture (Fig. 1).**
2. Remove/ detach existing reflector, **Socket Cap**, **Yoke** or any obstruction above ceiling within **Existing Mounting Frames** as shown in **Fig. 2** to allow installation of the DLED8 and to have access to **Junction Box**.
   Note - Height of DLED8 is 8-3/4" (222.3mm).
3. Open access plate on **Junction Box** and disconnect power connections.

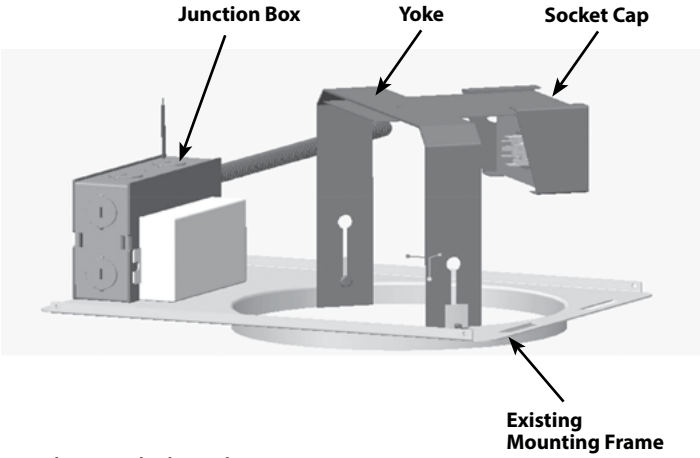

Fig.1. Existing Fixture

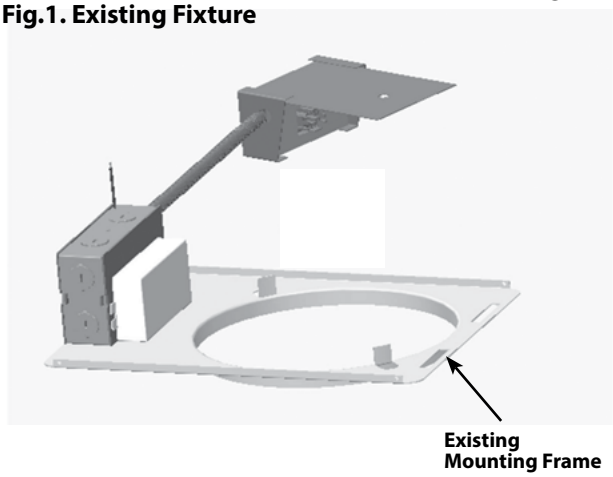

Fig.2. Remove/ Detach all obstructions

DLED8 INSTALLATION INSTRUCTIONS

Thank you for buying RAB lighting fixtures. Our goal is to design the best quality products to get the job done right. We'd like to hear your comments. Call the Marketing Department at 888-RAB-1000 or email: marketing@rabweb.com

INSTALLATION - RETROFIT HOUSING & TRIM CONE

DLED8 is suitable for installation in Non-Insulated Ceilings. Insulation not to be placed over the top of or within 3" of DLED8.

DLED8 can be used in existing mounting frames with opening of minimum 7-7/8" (200mm) and maximum of 8-7/8" (225.4mm).

1. Push up and slide the **Retrofit Housing** section into the ceiling as shown in **Fig. 3**. Be sure the **Mounting Flag (3)** is folded in as the fixture slides through ceiling hole.

2. To secure fixture over **Existing Mounting Frame**, swing **Mounting Flag (3)** outward by turning **Flag Screw** clockwise. **Ceiling Flange** should be snug tight against ceiling as shown in **Fig. 4**. DO NOT OVERTIGHTEN SCREWS.
   Warning - Install into ceiling of maximum ceiling thickness of 1-3/8" (34.9mm).

3. Snap fit 2' **Flexible Conduit** whip into 7/8" diameter knock-out on **Junction Box.**

4. Use appropriate UL approved wire connectors as required by code to complete wiring between conduit whip and with supply wires. Be careful not to pinch wires.
   WARNING: To prevent wiring damage or abrasion, do not expose wiring to edges of sharp objects.

5. Install **Trim Cone** in the **Retrofit Housing** as shown in **Fig. 5. Jam Clips (3)** will hold the **Trim Cone** in place.

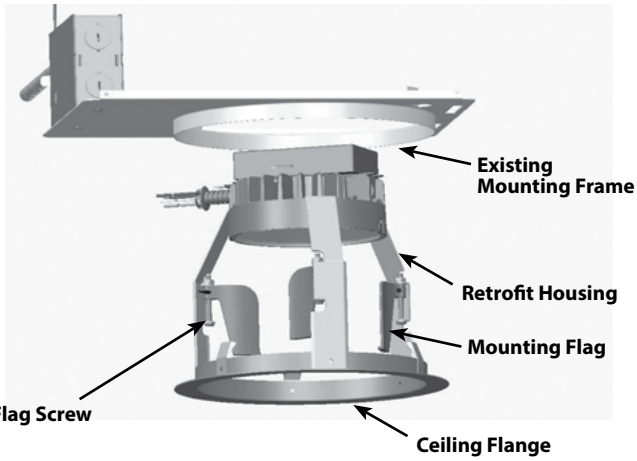

Fig.3.

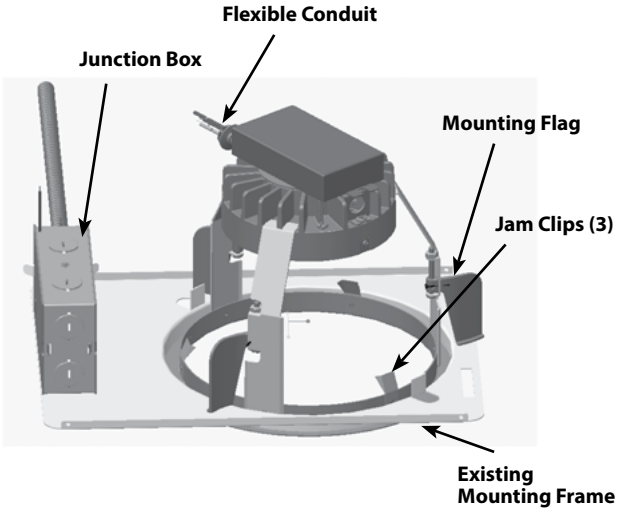

Fig.4.

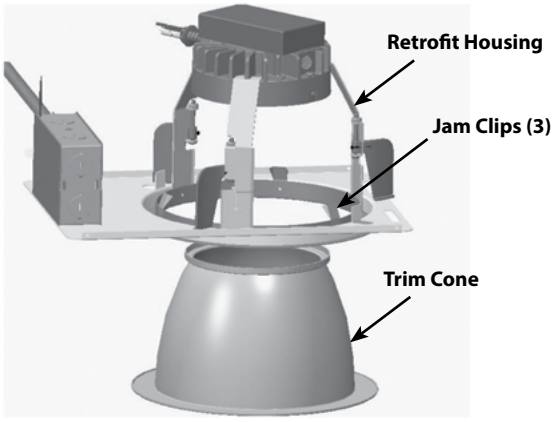

Fig.5.

DLED8 INSTALLATION INSTRUCTIONS

Thank you for buying RAB lighting fixtures. Our goal is to design the best quality products to get the job done right. We'd like to hear your comments. Call the Marketing Department at 888-RAB-1000 or email: marketing@rabweb.com

0-10V DIMMABLE WIRING

Universal voltage driver permits operation at 120V thru 277V, 50 or 60 Hz. 0-10V control wires must be rated for 300V minimum. For 0-10V Dimming, follow the wiring directions as shown below.

1. Connect the black fixture lead to the (+) LINE supply lead.
2. Connect the white fixture lead to the (-) COMMON supply lead.
3. Connect the GROUND wire from fixture to supply ground. Do NOT connect the GROUND of the dimming fixture to the output.
4. Connect the purple fixture lead to the (V+) DIM lead.
5. Connect the gray fixture lead to the (V-) DIM lead.
6. Cap the yellow fixture lead. Do NOT connect.

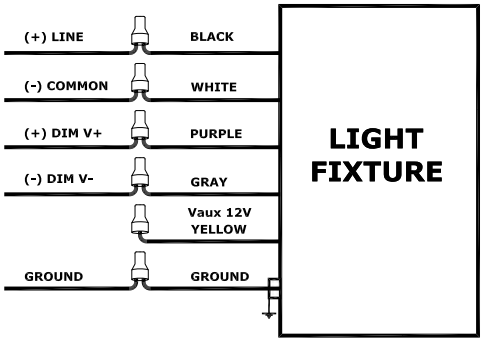

TROUBLESHOOTING

1. Check that the line voltage at fixture is correct. Refer to wiring directions.
2. Is the fixture grounded properly?

CLEANING & MAINTENANCE

CAUTION: Be sure fixture temperature is cool enough to touch. Do not clean or maintain while fixture is energized.

1. Clean lens & fixture with non-abrasive cleaning solution.
2. Do not open fixture to clean the LED. Do not touch the LED.

Note: These instructions do not cover all details or variations in equipment nor do they provide for every possible situation during installation, operation or maintenance.

©2016 RAB LIGHTING Inc.
Northvale, New Jersey 07647 USA

Easy Installation & Product Help

Tech Help Line
Call our experts 888 RAB-1000

rabweb.com
Visit our website for product info

email
Answered promptly sales@rabweb.com