EZLED78SFNB44/BL

RAB Outdoor

This 78W spotlight combines high lumen output and a concentrated narrow beam distribution to illuminate objects up to 80 feet away with brilliant precision. Ideal for lighting large flags, tall building façades and signage.

Color: Bronze

Weight: 26.6 lbs

Project:

Type:

Prepared By:

Date:

Driver Info

Type	Constant Current
120V	0.82A
208V	0.53A
240V	0.46A
277V	0.40A
Input Watts	89.90W
Efficiency	87%

LED Info

Watts	78.00W
Color Temp	4000K (Neutral)
Color Accuracy	82 CRI
L70 Lifespan	100,000
Lumens	8,996
Efficacy	100.1 LPW

Technical Specifications

Other

EZLED78SF with Bi-Level Operation:

Allows 33%-66%-100% output modes

Equivalency:

Replaces 400W Metal Halide

Warranty:

RAB warrants that our LED products will be free from defects in materials and workmanship for a period of five (5) years from the date of delivery to the end user, including coverage of light output, color stability, driver performance and fixture finish. RAB's warranty is subject to all terms and conditions found at rablighting.com/warranty.

Patents:

The design of EZLED is protected by patents in U.S. Pat D679,856, and pending patents in Canada, China, Taiwan and Mexico.

Buy American Act Compliance:

RAB values USA manufacturing! Upon request, RAB may be able to manufacture this product to be compliant with the Buy American Act (BAA). Please contact customer service to request a quote for the product to be made BAA compliant.

Listings

UL Listing:

Suitable for wet locations. Suitable for ground mounting.

IESNA LM-79 & LM-80 Testing:

RAB LED luminaires and LED components have been tested by an independent laboratory in accordance with IESNA LM-79 and LM-80.

DLC Listed:

This product is on the Design Lights Consortium (DLC) Qualified Products List and is eligible for rebates from DLC Member Utilities. DLC Product Code: P4EMRWWD

Construction

Effective Projected Area:

EPA = 1.2

Cold Weather Starting:

Minimum starting temperature is -40°C (-40°F)

Maximum Ambient Temperature:

Suitable for use in 40°C (104°F)

Thermal Management:

Superior thermal management with external "Air-Flow" fins

Housing:

Precision die-cast aluminum housing and door frame

Mounting:

2 3/8" slipfitter mount with stainless steel hardware

Lens:

Tempered glass

Reflector:

Vacuum-metalized, specular thermoplastic

Gaskets:

High-temperature silicone

Finish:

Formulated for high durability and long-lasting color

Green Technology:

Mercury and UV free. RoHS-compliant components.

Copyright © 2019 RAB Lighting All Rights Reserved Note: Specifications are subject to change at any time without notice

EZLED78SFNB44/BL

RAB Outdoor

Technical Specifications (continued)

Electrical

Driver:

3x26W drivers Constant current, Class2, 100-277V. 50/60 Hz, 6KV Surge Protection, 720mA, 100-277V 0.4A, Power Factor 99%.

Note:

All values are typical (tolerance +/- 10%)

LED Characteristics

LEDs:

Three multi-chip, high-output, long-life LEDs

Lifespan:

100,000-hour LED lifespan based on IES LM-80 results and TM-21 calculations

Color Consistency:

3-step MacAdam Ellipse binning to achieve consistent fixture-to-fixture color

Color Stability:

LED color temperature is warrantied to shift no more than 200K in CCT over a 5-year period

Color Uniformity:

RAB's range of CCT (Correlated Color Temperature) follows the guidelines of the American National Standard for Specifications for the Chromaticity of Solid State Lighting (SSL) Products, ANSI C78.377-2017.

Optical

NEMA Type:

NEMA Beam Spread of 4H x 4V

Dimensions

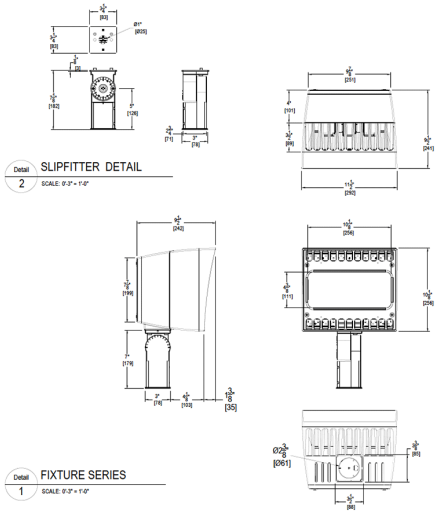

Features

- High powered narrow beam spotlight
- Illuminates objects at a distance of 80 feet
- Available in NEMA type 3H x 3V and 4H x 4V
- Trunnion or slipfitter mounting options available
- Outperforms equivalent MH fixtures

Ordering Matrix

Family	Wattage	Mounting	Color Temp	Distribution	Finish	Voltage	Dimming	Control Options
EZLED	78	SF	N	B44			/BL	
	78 = 78W	**SF =** Slipfitter **T =** Trunnion	**Blank =** 5000K (Cool) **N =** 4000K (Neutral) **Y =** 3000K (Warm)	**Blank =** NEMA 3H x 3V **B44 =** NEMA 4H x 4V	**Blank =** Bronze **W =** White	**Blank =** 120-277V	**Blank =** None (Standard) **/D10 =** 0-10V Dimming **/BL =** Bi-Level	**Blank =** No Option **/PC =** 120V Button Photocell **/PC2 =** 277V Button Photocell **/PCS =** 120V Swivel Photocell **/PCS2 =** 277V Swivel Photocell **/PCT =** 120-277V Twistlock Photocell

Copyright © 2019 RAB Lighting All Rights Reserved Note: Specifications are subject to change at any time without notice