WPLEDC80N/480/PCS4

RAB | Outdoor

LED 80W Wall packs. 3 cutoff options. patent-pending thermal management system. 100,000 hour L70 lifespan. 5-year, no-compromise warranty.

Color: Bronze

Weight: 17.6 lbs

Project:

Type:

Prepared By:

Date:

Driver Info

Type	Constant Current
120V	N/A
208V	N/A
240V	N/A
277V	N/A
Input Watts	82.19W
Efficiency	97%

LED Info

Watts	80.00W
Color Temp	4000K (Neutral)
Color Accuracy	75 CRI
L70 Lifespan	100,000
Lumens	10,006
Efficacy	121.7 LPW

Technical Specifications

Listings

UL Listing:

Suitable for wet locations

IESNA LM-79 & LM-80 Testing:

RAB LED luminaires and LED components have been tested by an independent laboratory in accordance with IESNA LM-79 and LM-80.

DLC Listed:

This product is listed by Design Lights Consortium (DLC) as an ultra-efficient premium product that qualifies for the highest tier of rebates from DLC Member Utilities.DLC Product Code: PGPMJEBT

LED Characteristics

LEDs:

Two (2) multi-chip, high-output, long-life LEDs

Lifespan:

100,000-hour LED lifespan based on IES LM-80 results and TM-21 calculations

Color Consistency:

3-step MacAdam Ellipse binning to achieve consistent fixture-to-fixture color

Color Stability:

LED color temperature is warrantied to shift no more than 200K in CCT over a 5-year period

Color Uniformity:

RAB's range of CCT (Correlated Color Temperature) follows the guidelines of the American National Standard for Specifications for the Chromaticity of Solid State Lighting (SSL) Products, ANSI C78.377.2011.

Construction

Cold Weather Starting:

Minimum starting temperature is -40°C (-40°F)

Maximum Ambient Temperature:

Suitable for use in 40°C (104°F)

Thermal Management:

Superior thermal management with external "Air-Flow" fins

Housing:

Precision die cast aluminum housing, lens frame

Mounting:

Die-cast aluminum wall bracket with (5) 1/2" conduit openings with plugs. Two-piece bracket with tether for ease of installation and wiring.

Arm:

Die-cast aluminum with wiring access plate

Cutoff:

Cutoff (7.5°)

Lens:

Tempered glass

Reflector:

Specular vacuum metallized polycarbonate

Gaskets:

High-temperature silicone gaskets, including a wiring plug gasket, seal out moisture

Finish:

Formulated for high durability and long-lasting color

Copyright © 2019 RAB Lighting All Rights Reserved Note: Specifications are subject to change at any time without notice

WPLEDC80N/480/PCS4

RAB | Outdoor

Technical Specifications (continued)

Construction

Green Technology:

Mercury and UV free. RoHS-compliant components.

IP Rating:

Ingress Protection rating of IP66 for dust and water

Electrical

Driver:

Constant Current, Class 2, 2000mA, 100-277V, 50-60Hz, 1.1A, Power Factor 99%

THD:

12.03% at 480V

Power Factor:

90.4% at 480V

Surge Protection:

4kV

Ballast Volts:

480V

Other

Patents:

The WPLED design is protected by patents in the U.S. Pat D653,377, Canada Pat. 142252, China Pat. ZL201130356930.8, and Mexico Pat. 36921 and pending patent in TW.

Warranty:

RAB warrants that our LED products will be free from defects in materials and workmanship for a period of five (5) years from the date of delivery to the end user, including coverage of light output, color stability, driver performance and fixture finish. RAB's warranty is subject to all terms and conditions found at rablighting.com/warranty.

Replacement:

Replaces up to 400W Metal Halide

Buy American Act Compliance:

RAB values USA manufacturing! Upon request, RAB may be able to manufacture this product to be compliant with the Buy American Act (BAA). Please contact customer service to request a quote for the product to be made BAA compliant.

Optical

BUG Rating:

B1 U1 G1

Dimensions

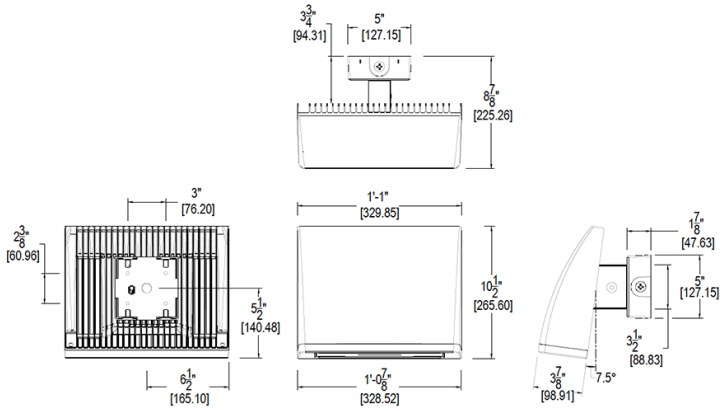

Features

- High performance LED light engine
- Maintains 70% of initial lumens at 100,000-hours
- Weatherproof high temperature silicone gaskets
- Superior heat sinking with die cast aluminum housing and external fins
- Traditional wall pack look from the front
- 3 cutoff options
- 5-Year, No-Compromise Warranty

Ordering Matrix

Family	Cutoff	Wattage	Color Temp	Finish	Driver Options	Options	Other Options
WPLED	C	80	N		/480	/PCS4	
	Blank = Standard (15 degrees) **C =** Cutoff (7.5 degrees) **FC =** Full Cutoff (0 degrees)	**52 =** 52W **80 =** 80W	**Blank =** 5000K (Cool) **N =** 4000K (Neutral) **Y =** 3000K (Warm)	**Blank =** Bronze **W =** White	**Blank =** 120-277V **/480 =** 480V **/BL =** Bi-Level **/D10 =** 0-10V Dimming	**Blank =** No Option **/PCS =** 120V Swivel Photocell **/PCS2 =** 277V Swivel Photocell **/PCS4 =** 480V Swivel Photocell **/LC =** Lightcloud®	**USA =** BAA Compliant **Blank =** Standard

Copyright © 2019 RAB Lighting All Rights Reserved Note: Specifications are subject to change at any time without notice