CANVAS78TY/PC2

RAB Outdoor

Precision 6H x 4V optics make this 78 Watt trunnion floodlight a great choice for illuminating large signs and building façades.

Color: Bronze

Weight: 27.5 lbs

Project:	Type:
Prepared By:	**Date:**

Driver Info

Type	Constant Current
120V	N/A
208V	0.53A
240V	0.46A
277V	0.40A
Input Watts	90.70W
Efficiency	86%

LED Info

Watts	78.00W
Color Temp	3000K (Warm)
Color Accuracy	70 CRI
L70 Lifespan	100,000
Lumens	9,656
Efficacy	106.5 LPW

Technical Specifications

Electrical

Drivers:

Constant current, Class 2, 100-277V, 50/60 Hz, 6kV Surge Protection, 720mA, 100-277V: 0.4A, THD <20%, Power Factor 99.8%

Photocell:

277V Button Photocell Included. Photocell is compatible with 208V-277V.

Note:

All values are typical (tolerance +/- 10%)

Listings

UL Listing:

Suitable for wet locations. Suitable for ground mounting.

IESNA LM-79 & LM-80 Testing:

RAB LED luminaires and LED components have been tested by an independent laboratory in accordance with IESNA LM-79 and LM-80.

DLC Listed:

This product is on the Design Lights Consortium (DLC) Qualified Products List and is eligible for rebates from DLC Member Utilities. DLC Product Code: P6G5VKA2

Construction

IP Rating:

Ingress Protection rating of IP66 for dust and water

Effective Projected Area:

EPA = 1.2

Cold Weather Starting:

Minimum starting temperature is -40°C (-40°F)

Ambient Temperature:

Suitable For use in 40°C (104°F)

Thermal Management:

Superior thermal management with external Air-Flow fins

Housing:

Precision die-cast aluminum housing and door frame

Mounting:

Trunnion mount with cord (18-3AWG STOOW 600V 105° wet location rated 3 ft.).

Lens:

Microprismatic diffusion lens for smooth and even light distribution

Reflector:

Vacuum-metalized, specular polycarbonate

Gaskets:

High-temperature silicone

Finish:

Formulated for high durability and long-lasting color

Green Technology:

Mercury and UV free. RoHS-compliant components.

LED Characteristics

LEDs:

Multi-chip, high-output, long-life LEDs

Copyright © 2019 RAB Lighting All Rights Reserved Note: Specifications are subject to change at any time without notice

Technical Specifications (continued)

LED Characteristics

Lifespan:

100,000-hour LED lifespan based on IES LM-80 results and TM-21 calculations

Color Consistency:

3-step MacAdam Ellipse binning to achieve consistent fixture-to-fixture color

Color Stability:

LED color temperature is warrantied to shift no more than 200K in CCT over a 5-year period

Color Uniformity:

RAB's range of CCT (Correlated Color Temperature) follows the guidelines of the American National Standard for Specifications for the Chromaticity of Solid State Lighting (SSL) Products, ANSI C78.377-2017.

Optical

NEMA Type:

NEMA Beam Spread of 6H x 4V

Other

Patents:

The design of CANVAS is protected by patents in pending patents in U.S., Canada, China, Taiwan and Mexico.

Equivalency:

Replaces 400W Metal Halide

Warranty:

RAB warrants that our LED products will be free from defects in materials and workmanship for a period of five (5) years from the date of delivery to the end user, including coverage of light output, color stability, driver performance and fixture finish. RAB's warranty is subject to all terms and conditions found at rablighting.com/warranty.

Buy American Act Compliance:

RAB values USA manufacturing! Upon request, RAB may be able to manufacture this product to be compliant with the Buy American Act (BAA). Please contact customer service to request a quote for the product to be made BAA compliant.

Dimensions

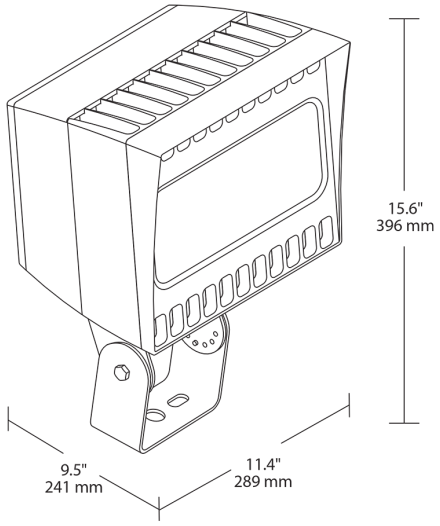

Features

- Replaces 250W MH Floodlights
- NEMA Type 6H x 4V ideal for signage & facades
- Ultra-low field-to-beam ratio concentrates light where it's required
- Microprismatic diffusion lens optimizes light output without glare
- Superior thermal management with patent-pending "Airflow" technology
- 100,000-Hour LED lifespan

Ordering Matrix

Family	Wattage	Mount	Color Temp	Finish	Options
CANVAS	78	T	Y		/PC2
	78 = 78W	**SF =** Slipfitter **T =** Trunnion	**Blank =** 5000K (Cool) **Y =** 3000K (Warm) **N =** 4000K (Neutral)	**Blank =** Bronze **W =** White	**Blank =** No Option **/BL =** Bi-Level **/D10 =** 0-10V Dimming **/PC =** 120V Photocell **/PC2 =** 277V Photocell **/PCS =** 120V Swivel Photocell **/PCS2 =** 277V Swivel Photocell

Copyright © 2019 RAB Lighting All Rights Reserved Note: Specifications are subject to change at any time without notice