FFLED39TB55/PC2

RAB Outdoor

Rectangular shaped LED floodlight designed to replace 150W Metal Halide. patent-pending "Air-Flow" technology ensures long LED and driver lifespan. Use for building fa?ades lighting, sign lighting, LED landscape lighting and instant-on security lighting.

Color: Bronze

Weight: 14.2 lbs

Project:	Type:
Prepared By:	Date:

Driver Info		LED Info	
Type	Constant Current	Watts	39W
120V	N/A	Color Temp	5000K (Cool)
208V	0.20A	Color Accuracy	71 CRI
240V	0.18A	L70 Lifespan	100,000
277V	0.15A	Lumens	4,703
Input Watts	41.8W	Efficacy	112.5 LPW

Technical Specifications

Electrical

Photocell:

277V Button Photocell Included. Photocell is compatible with 208V-277V.

Surge Protection:

4kV

Driver:

Constant Current, Class 2, 100-277V, 50/60 Hz, 6 kV surge protection, 120V: 0.35A, 208V: 0.20A, 240V: 0.18A, 277V: 0.15A

Listings

DLC Listed:

This product is listed by Design Lights Consortium (DLC) as an ultra-efficient premium product that qualifies for the highest tier of rebates from DLC Member Utilities.
DLC Product Code: PM5S7WAH

UL Listing:

Suitable For Wet Locations. Suitable for mounting within 1.2M(4FT) of the ground.

IESNA LM-79 & LM-80 Testing:

RAB LED luminaires and LED components have been tested by an independent laboratory in accordance with IESNA LM-79 and LM-80.

LED Characteristics

Lifespan:

100,000-hour LED lifespan based on IES LM-80 results and TM-21 calculations

Note:

All values are typical (tolerance +/- 10%)

LEDs:

Two multi-chip, 26Watt high performance LEDs

Color Consistency:

7-step MacAdam Ellipse binning to achieve consistent fixture-to-fixture color

Color Stability:

LED color temperature is warrantied to shift no more than 200K in CCT over a 5-year period

Color Uniformity:

RAB's range of CCT (Correlated Color Temperature) follows the guidelines of the American National Standard for (SSL) Products, ANSI C78.377-2017.

Construction

IP Rating:

Ingress Protection rating of IP66 for dust and water

Ambient Temperature:

Suitable For use in 40°C (104°F)

Cold Weather Starting:

Minimum starting temperature is -40°C (-40°F)

Thermal Management Housing:

Superior heat sinking with external Air-Flow fins

Housing:

Die-cast aluminum housing, lens frame and mounting arm

Threaded Size:

1/2" threaded arm

Mounting:

Heavy-duty Trunnion mount with stainless steel hardware

Copyright © 2019 RAB Lighting Inc. All Rights Reserved Note: Specifications are subject to change at any time without notice

Technical Specifications (continued)

Construction

Effective Projected Area:

EPA = 0.65

Reflector:

Specular polycarbonate

Gaskets:

High-temperature silicone gaskets

Finish:

Formulated for high durability and long-lasting color

Green Technology:

Mercury and UV free. RoHS-compliant components.

Optical

NEMA Type:

NEMA Beam Spread of 5H x 5V

Other

Warranty:

RAB warrants that our LED products will be free from defects in materials and workmanship for a period of five (5) years from the date of delivery to the end user, including coverage of light output, color stability, driver performance and fixture finish. RAB's warranty is subject to all terms and conditions found at www.rablighting.com/legal#warranty

Patents:

The FFLED design is protected by U.S. Pat. D643,147, Canada Pat. 140798, China Pat. ZL201130171304.1, Mexico Pat. 36757 and pending patent in Taiwan.

Equivalency:

Equivalent to 150W Metal Halide

Buy American Act Compliance:

RAB values USA manufacturing! Upon request, RAB may be able to manufacture this product to be compliant with the Buy American Act (BAA). Please contact customer service to request a quote for the product to be made BAA compliant.

Dimensions

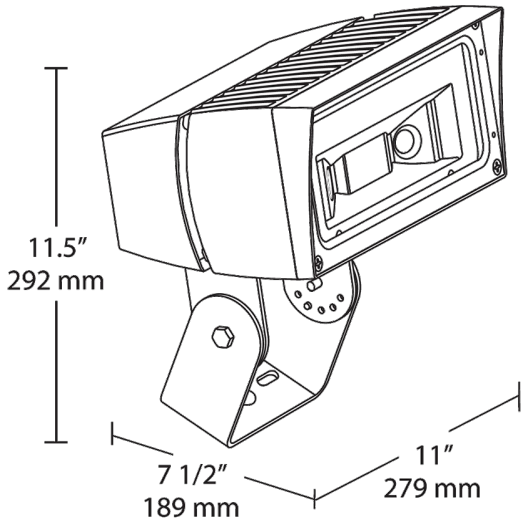

Features

- Ultra-efficient LED and optical design
- Replaces 150W MH floodlights
- 100,000-hour life based on LM-80 results and TM-21 calculations
- "Air-Flow" technology heatsink
- 5-Year, No-Compromise Warranty

Copyright © 2019 RAB Lighting Inc. All Rights Reserved Note: Specifications are subject to change at any time without notice

FFLED39TB55/PC2

RAB | Outdoor

Ordering Matrix

Family	Wattage	Mounting	Color Temp	NEMA Type	Finish	Driver	Photocell Options	Other Options
FFLED	39	T		B55			/PC2	
	18 = 18W **26 =** 26W **39 =** 39W **52 =** 52W **80 =** 80W	**Blank =** Swivel Arm **SF =** Slipfitter **T =** Trunnion	**Blank =** 5000K (Cool) **N =** 4000K (Neutral) **Y =** 3000K (Warm)	**Blank =** 7H x 6V **B55 =** 5H x 5V **B44 =** 4H x 4V	**Blank =** Bronze **W =** White	**Blank =** On/Off **/D10 =** 0-10V Dimming **/480 =** 480V On/Off (not available for 80W models)	**Blank =** No Option **/PC =** 120V Photocell **/PC2 =** 277V Photocell **/PCS =** 120V Swivel Photocell **/PCS2 =** 277V Swivel Photocell **/PCS4 =** 480V Swivel Photocell	**USA =** BAA Compliant **Blank =** Standard

Copyright © 2019 RAB Lighting Inc. All Rights Reserved Note: Specifications are subject to change at any time without notice