Customer Specification

Part Number:	P16M24SM
Product Description:	BEAM CLAMP FOR 1/8" - 1/4" FLANGE WITH 1" SNAP CLOSE CONDUIT CLIP - SIDE MOUNT

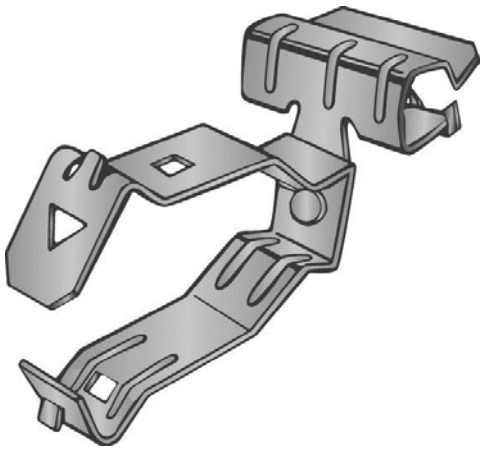

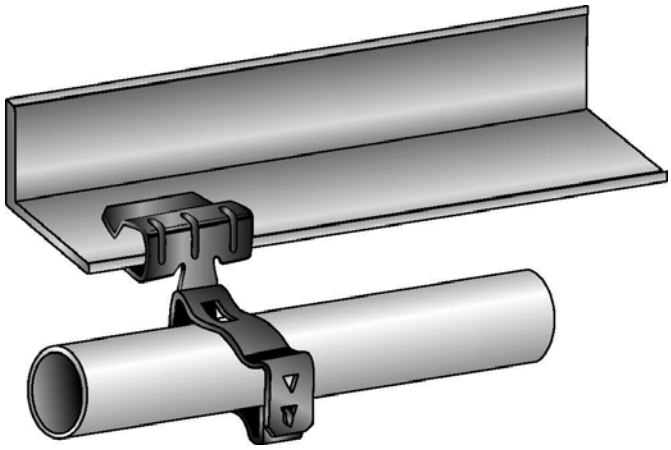

Material Specifications

Type:	Assembly	Finish:	Assembly
Color:	Various		

Function Specifications

Compatible Wires and Cables

AC/MC CABLE (OD):	
Drop Wire:	
Plain Rod (in):	

Threaded Rods and Bolts

Tapped Holes:	
Clearance Holes (in):	
Threaded Rod Size (in):	

Compatible Conduit

EMT Size (in):	1
Rigid/IMC (in):	1

Compatible Flanges and Studs

Flange Size (in):	1/8 to 1/4
Metal Stud Size (ins):	

Static Load Rating

Vertical (lbs):	25
Horizontal (lbs):	

Other

Codes and Regulatory

Regulatory Certifications:	UL/cUL	Country of Origin:	US

Packaging

General Packaging:	Cardboard Box	Pieces per Package:	100
Box Size:	15 X 8.25 X 7.25	Other Box Features:	

Document Information

Created By:	DBLA	Customer Specification #:	C11337
Checked By:	DJW	Revision Level:	01
Approved By:	KLN	ECN #:	GAECN01482
		Date:	12/10/2013