UNPLATED MATERIAL NUMBER	UNPLATED ENG. NUMBER	PLATED MATERIAL NUMBER	PLATED ENGINEERING NUMBER	STUD SIZE	AWG WIRE RANGE	"S" ±.015/(0.38)	"L" ±.100/(2.54)	"W" ±.035/(0.89)	"C" ± .050/(1.27)	"B" ± .020/(0.51)	"T" ±.020/(0.50)	
192210423	BCL-1014	192210422	BCL-1014-PL	1/4/(6.4)	1/0	.278/(7.06)	1.844/(46.84)	.728/(18.49)	.460/(11.68)	.400/(10.16)	.110/(2.80)	
192210394	BCL-10516	192210240	BCL-10516-PL	5/16/(7.9)	1/0	.340/(8.64)	1.844/(46.84)	.728/(18.49)	.460/(11.68)	.400/(10.16)	.110/(2.80)	
192210377	BCL-1038	192210241	BCL-1038-PL	3/8/(9.5)	1/0	.400/(10.16)	1.844/(46.84)	.728/(18.49)	.460/(11.68)	.400/(10.16)	.110/(2.80)	
192210393	BCL-1012	192210242	BCL-1012-PL	1/2/(12.7)	1/0	.520/(13.21)	1.844/(46.84)	.728/(18.49)	.460/(11.68)	.400/(10.16)	.110/(2.80)	
192210437	BCL-1012-WP	192210436	BCL-1012-WP-PL	1/2/(12.7)	1/0	.520/(13.21)	1.906/(48.41)	.813/(20.65)	.442/(11.23)	.400/(10.16)	.110/(2.80)	
192210249	BCL-2014	192210234	BCL-2014-PL	1/4/(6.4)	2/0	.278/(7.06)	2.062/(52.37)	.824/(20.93)	.522/(13.26)	.461/(11.71)	.110/(2.80)	
192210398	BCL-20516	192210243	BCL-20516-PL	5/16/(7.9)	2/0	.340/(8.64)	2.062/(52.37)	.824/(20.93)	.522/(13.26)	.461/(11.71)	.110/(2.80)	
192210379	BCL-2038	192210244	BCL-2038-PL	3/8/(9.5)	2/0	.400/(10.16)	2.062/(52.37)	.824/(20.93)	.522/(13.26)	.461/(11.71)	.110/(2.80)	
192210397	BCL-2012	192210245	BCL-2012-PL	1/2/(12.7)	2/0	.520/(13.21)	2.062/(52.37)	.824/(20.93)	.522/(13.26)	.461/(11.71)	.110/(2.80)	
192210597	BCL-2058	192210598	BCL-2058-PL	5/8/(15.9)	2/0	.656/(16.66)	2.062/(52.37)	.824/(20.93)	.522/(13.26)	.461/(11.71)	.110/(2.80)	
192210478	BCL-3014	192210570	BCL-3014-PL	1/4/(6.4)	3/0	.278/(7.06)	2.156/(54.76)	.916/(23.27)	.501/(12.73)	.511/(12.93)	.115/(2.92)	
192210402	BCL-30516	192210246	BCL-30516-PL	5/16/(7.9)	3/0	.340/(8.64)	2.156/(54.76)	.916/(23.27)	.501/(12.73)	.511/(12.93)	.115/(2.92)	
192210381	BCL-3038	192210247	BCL-3038-PL	3/8/(9.5)	3/0	.400/(10.16)	2.156/(54.76)	.916/(23.27)	.501/(12.73)	.511/(12.93)	.115/(2.92)	
192210401	BCL-3012	192210248	BCL-3012-PL	1/2/(12.7)	3/0	.520/(13.21)	2.156/(54.76)	.916/(23.27)	.501/(12.73)	.511/(12.93)	.115/(2.92)	
192210413	BCL-40516	192210412	BCL-40516-PL	5/16/(7.9)	4/0	.340/(8.63)	2.344/(59.54)	.999/(25.37)	.550/(13.97)	.559/(14.20)	.135/(3.43)	J1
192210382	BCL-4038	192210250	BCL-4038-PL	3/8/(9.5)	4/0	.400/(10.16)	2.344/(59.54)	.999/(25.37)	.550/(13.97)	.559/(14.20)	.135/(3.43)	J1
192210403	BCL-4012	192210251	BCL-4012-PL	1/2(12.7)	4/0	.520/(13.21)	2.344/(59.54)	.999/(25.37)	.550/(13.97)	.559/(14.20)	.135/(3.43)	J1
192210652	BCL-4014	192210648	BCL-4014-PL	1/4/(6.4)	4/0	.278/(7.061)	2.344/(59.54)	.984/(24.99)	.550/(13.97)	.559/(13.97)	.135/(3.43)	
-	-	192210847	BCL-1010MM-PL	10mm	1/0	.417/(10.59)	1.844/(46.84)	.728/(18.49)	.460/(11.86)	.400/(10.16)	.110/(2.80)	
-	-	192210848	BCL-2010MM-PL	10mm	2/0	.417/(10.59)	2.062/(52.37)	.824/(20.93)	.522/(13.26)	.461/(11.71)	.110/(2.80)	
-	-	192210862	BCL-3010MM-PL	10mm	3/0	.417/(10.59)	2.156/(54.76)	.916/(23.273)	.501/(12.73)	.511/(12.93)	.115/(2.92)	

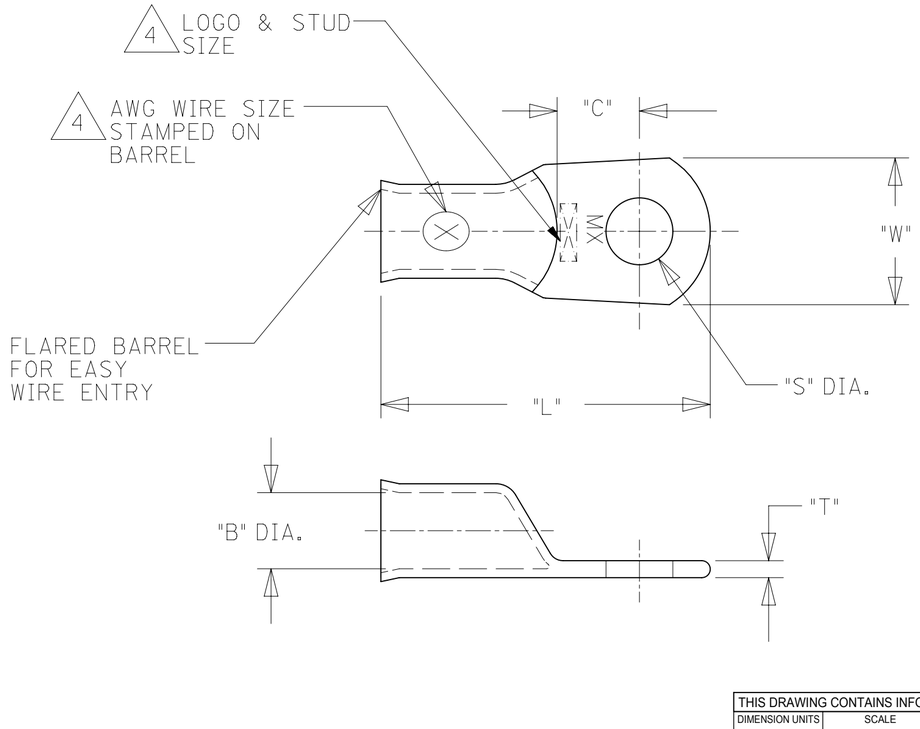

NOTES:

1. FOR INSPECTION SIGHT HOLE, PLEASE CONSULT FACTORY.
2. OTHER STUD SIZES MAY BE AVAILABLE, PLEASE CONSULT FACTORY.
3. MATERIAL: COPPER
   PLATING: TIN
4. MARKINGS CAN BE AT EITHER LOCATION SHOWN.
5. IF TONGUE IS TO BE BENT AT ANY ANGLE. IT MUST BE BENT AROUND A RADIUS ONE HALF THE TONGUE THICKNESS.

J1

THIS DRAWING CONTAINS INFORMATION THAT IS PROPRIETARY TO MOLEX ELECTRONIC TECHNOLOGIES, LLC AND SHOULD NOT BE USED WITHOUT WRITTEN PERMISSION

DIMENSION UNITS	SCALE
IN/MM	NTS

GENERAL TOLERANCES (UNLESS SPECIFIED)

	MM	INCH
4 PLACES	±	±
3 PLACES	±	± 0.005
2 PLACES	± 0.13	± 0.01
1 PLACE	± 0.25	±
0 PLACES	±	±
ANGULAR TOL	± °	

DRAFT WHERE APPLICABLE MUST REMAIN WITHIN DIMENSIONS

CURRENT REV DESC: REMOVE NOTE 6: USE .625 BARREL ID FOR HIGH STRAND WELDING CABLE. (REF BCL-4012-PL)

EC NO: 651391
DRWN: DMYRICK 2020/12/14
CHK'D: JMACNEIL 2020/12/14
APPR: JMACNEIL 2020/12/14

INITIAL REVISION:
DRWN: BRE 2002/06/24
APPR: RWD 2002/06/24

THIRD ANGLE PROJECTION | DRAWING: C-SIZE | SERIES: 19221

molex

BATTERY CABLE LUG
COPPER TERMINALS 1/0, 2/0, 3/0 & 4/0

PRODUCT CUSTOMER DRAWING

DOCUMENT NUMBER	DOC TYPE	DOC PART	REVISION
SD-19221-011	PSD	001	J1

MATERIAL NUMBER	CUSTOMER	SHEET NUMBER
SEE TABLE	GENERAL MARKET	1 OF 1

DOCUMENT STATUS	P1	RELEASE DATE	2020/12/14 23:52:31

FORMAT: Eng-lega-master-tb-prod-C
REVISION: D
DATE: 2018/01/18