WIREMOLD®

Walker® Infloor Systems

Modulink™ Nonmetallic Modular Floor Box

Cat. Nos. 880MP and 880MPA INSTALLATION INSTRUCTIONS

Installation Instruction No.: 1A0145 R2 – Updated December 2002

Walker® electrical systems conform to and should be properly grounded in compliance with requirements of the current National Electrical Code or codes administered by local authorities.

All electrical products may present a possible shock or fire hazard if improperly installed or used. Walker electrical products bear the mark as UL Listed and/or Classified and should be installed in conformance with current local and/or the National Electrical Code. Look for listing and/or classification mark on product label.

Module Linking:

1. Multiple services or compartments may be obtained by ganging together up to three single-gang units (Cat. No. 880MP).
2. For multiple compartment installations which require pass-through between mating modules, you must remove the knockout section on adjacent surfaces. To do this, break away with a hammer making sure you remove knockouts which will be facing one another after linking the assembly (see Figure 1). **Knockout tabs are intended for passage between boxes only. They are not designed for the attachment of conduit fittings**.
3. To assemble the modular units, first apply solvent cement around the flat mating surfaces of the adjacent walls and “dovetail” slots (see Figure 1). Engage the “dovetails” and slide the units together until seated (see Figure 2).

Concrete Preparation:

4. Cement conduit closure plugs to unused ports or use conduit reducers if reduction is required. Knockout must be removed from closure plug for use on 1/2" trade size conduit (see Figure 3).
5. Secure the box assembly to prevent floating during concrete pour. For above grade, screw or nail the assembly to the concrete form. For on-grade applications, drive stakes or rebar next to the box and secure with wire. Make sure the stakes are below the 3 1/2" [89mm] min. screed line (see Figure 3).
6. Cut conduit to length and cement to ports/reducers.
7. **Make sure the box spacer and mud cap are in place prior to pouring concrete. The interior spacer and cap prevent any movement of the box walls during the pour**.
8. Pour concrete to desired depth using graduated markings on the box exterior as a guide.

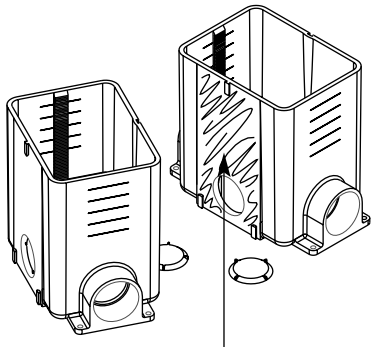

Figure 1

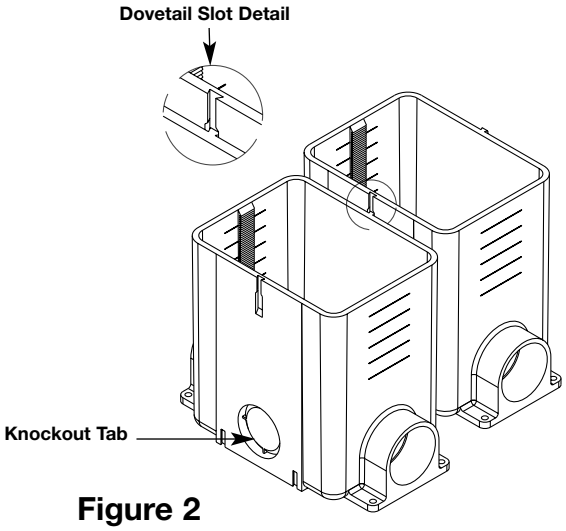

Figure 2

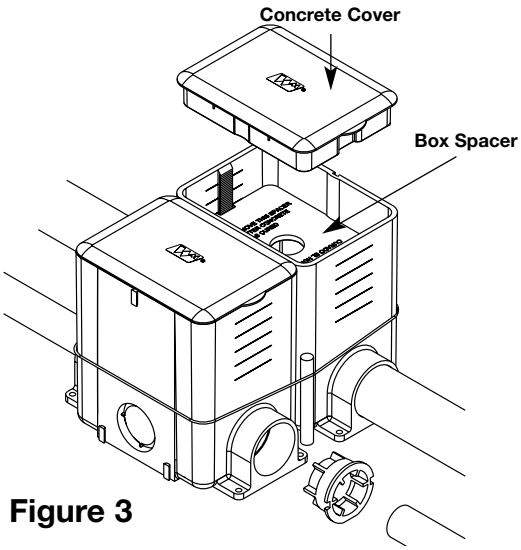

Figure 3

Floor Finishing and Activation:

9. After concrete has cured, saw off the remainder of the box(es) at floor level using a wood saw and remove the box spacer. If the final floor covering is a thicker than 5/16" [7.9mm], leave enough of the box protruding above the floor to compensate (see Figure 4).

10. Wire fill capacity is determined by reading the first legible volume calibration along the interior of the box.

11. A cover plate adapter (Cat. No. 880MPA) is required for each gang or compartment of the activation. The adapter is installed by pushing it into the box opening until firmly seated. The ratchet teeth along the box interior will retain the adapter without the use of screws or glue.

12. Bend radius control for fiber optic communication activations is maintained by wrapping the cable around the storage loop on the underside of the cover adapter prior to installation (see Figure 5).

13. Attach the trim flange (sold separately) using four #8-32 screws supplied with trim flange (see Figure 6).

14. Complete the installation by attaching the appropriate cover plate option.

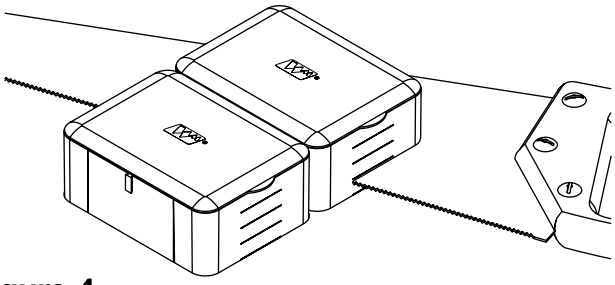

Figure 4

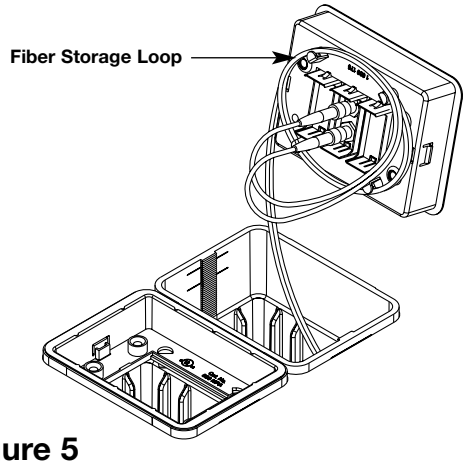

Figure 5

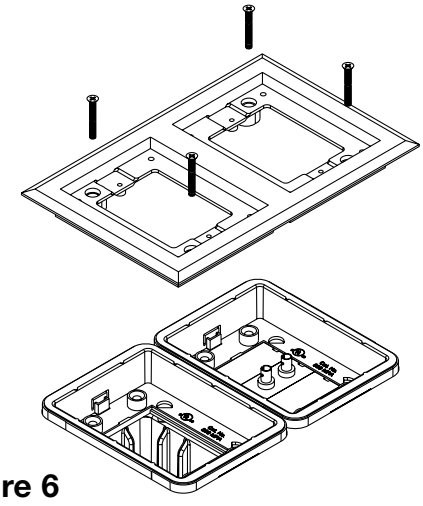

Figure 6

WIREMOLD®
Walker® Infloor Systems

The Wiremold Company
U.S. and International:
60 Woodlawn Street • West Hartford, CT 06110
1-800-621-0049 • FAX 860-232-2062 • Outside U.S.: 860-233-6251
Canada:
850 Gartshore Street • Fergus, Ontario N1M 2W8
1-800-741-7957 • FAX 519-843-5980

© Copyright 2002 The Wiremold Company All Rights Reserved