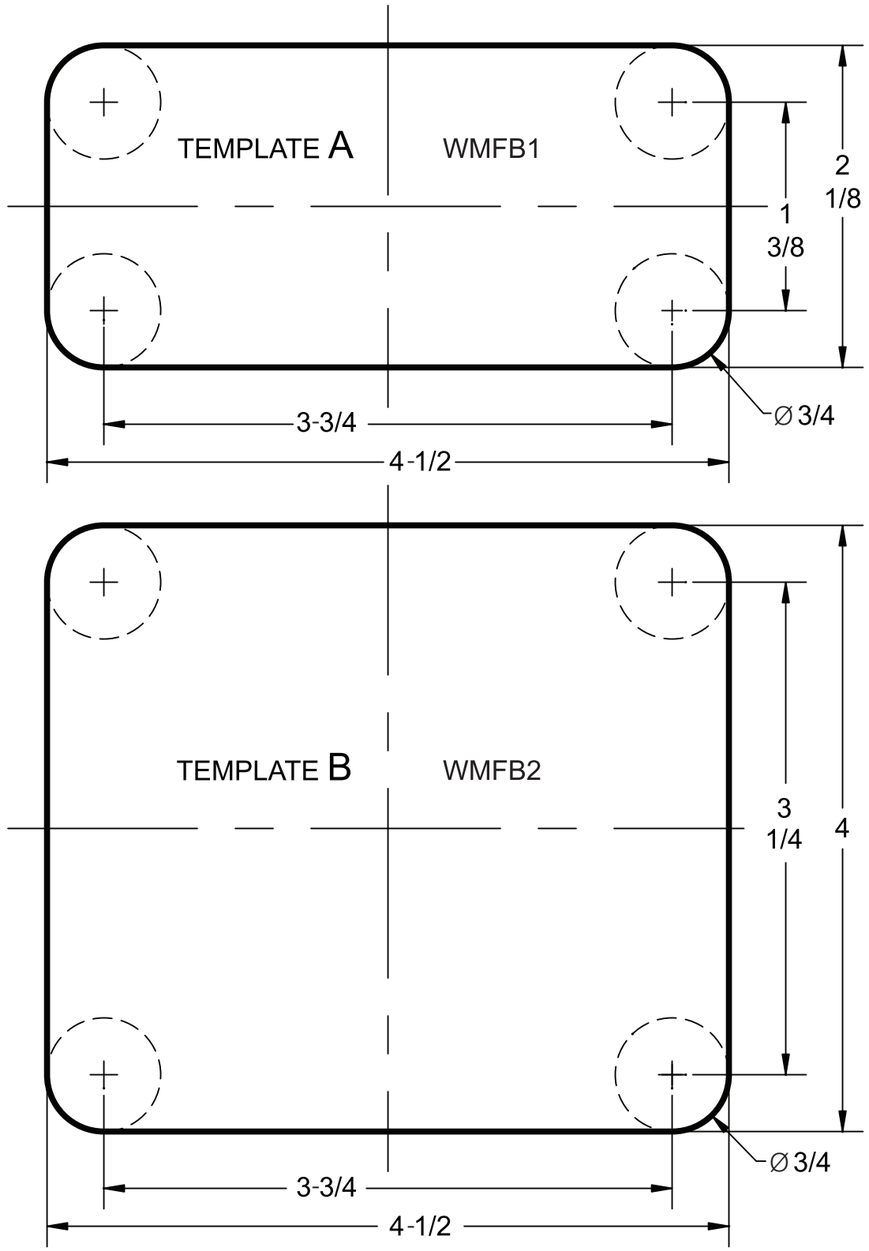

WIREMOLD
legrand

U.S. and International: 60 Woodlawn Street • West Hartford, CT 06110 • 1-800-621-0049 • FAX 860-232-2062 • Outside U.S.: 860-233-6251
Canada: 570 Applewood Crescent • Vaughan, Ontario L4K 4B4 • 1-800-723-5175 • FAX 905-738-9721
www.wiremold.com

P/N 340771 Rev. B

Printed in USA

WMFB-1 & WMFB-2 SERIES FLOOR BOX
INSTALLATION INSTRUCTIONS

WIREMOLD
legrand

NOTICE: READ BEFORE INSTALLING DEVICE

FEATURES AND BENEFITS

- Exclusive Dual Voltage Single Gang Floor Box, great for TV's, Telephones and Laptop connections
- Complete line of low voltage connectors available through Pass and Seymour (www.passandseymour.com).
- Installs before or after the floor is completed to ensure the best possible finish
- Easy rectangular floor cut out
- Swing bracket mounting option, superior for tile or marble floors
- No messy caulking needed to meet scrub water requirements
- Plastic Boxes do not require ground bonding in most applications

Available Catalog #'s

Cat #	Description
WMFB1DR*	1 gang floor box, Duplex Cover, Duplex 15 amp Receptacle
WMFB1KS2*	1 gang floor box, Single Cover, Two Port Keystone Jack
WMFB1KS4*	1 gang floor box, Duplex Cover, Four Port Keystone Jack
WMFB1SR*	1 gang floor box, Single Cover, Single 15 amp Receptacle
WMFB1SRKS1*	1 gang floor box, Duplex Cover, Single 15 amp Receptacle & 1 Port Keystone Jack
WMFB2DR2*	2 gang floor box, Two Duplex Cover, Two Duplex 15 amp Receptacles
WMFB2DRKS4*	2 gang floor box, Two Duplex Cover, Duplex 15 amp Receptacle & 4 Port Keystone Jack
WMFB2KS8*	2 gang floor box, Two Duplex Cover, Two 4 Port Keystone Jack

*denotes: B = Brass Cover or N = Nickel Plated Cover

NOTICE: For installation only by a electrician or other qualified person in accordance with the National Electrical Code, Canadian Electrical Code, local Codes and the instructions on this sheet.

CAUTION: RISK OF ELECTRICAL SHOCK. Turn off all power to circuit before installing this device. Improper wiring of any electrical device can cause serious injury or death.

CAUTION: Connect only copper or copper-clad wire to the device in this package. Do not connect aluminum wire to this device.

NOTE: USE ONLY ELECTRICAL MOUNTING BOX PROVIDED.

NEW/OLD CONSTRUCTION

1. **WARNING:** TEST THAT POWER IS OFF AT CIRCUIT BREAKER OR FUSE BLOCK!
2. Determine approximate location (which joists to put it between) and route cable(s) to joist cavity and fasten cable within 12" of proposed opening per NEC 334.30 leaving large enough loop to later install box after finishing floor installation.
3. Determine box location and drill four 3/4" diameter holes using template **"A"** for WMFB1 series or template **"B"** for WMFB2 series.

   Note: When installing tile, marble or hardwood flooring, you may want to wait to cut the opening during the finished floor installation to ensure the opening in the floor does not end up in the middle of a tile or hardwood plank.
4. Cut remainder of opening using the appropriate template by connecting the edges of the holes.
5. Complete the finished floor installation up to the previously cut opening, ensuring the box will still fit into opening.

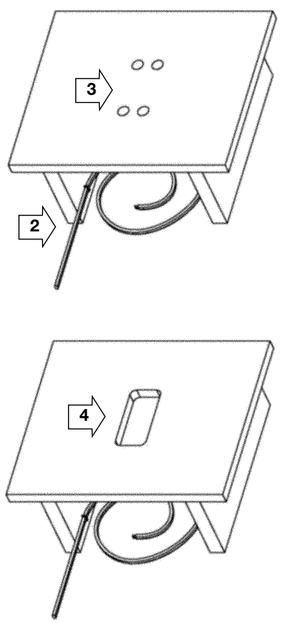

6. Pull the wires through the opening in floor and into the auto-clamp feature. Knock-outs are provided for low voltage cables if desired. If Romex-type NM cable is routed through the knockouts, an approved wire clamp must be used.
7. Attach box to flooring using either the four #6 drywall screws included or use the assembled swing brackets. Tighten screws firmly. When assembling to carpet, the carpet may need to be trimmed back to ensure the box flange sets flush. Trim only the carpet loops/shag and leave the carpet backing under the flange for security. Cut the padding back 1-2" larger than the opening to ensure the device seats firmly and flush to the floor.
8. Install device(s) per appropriate installation instructions below.

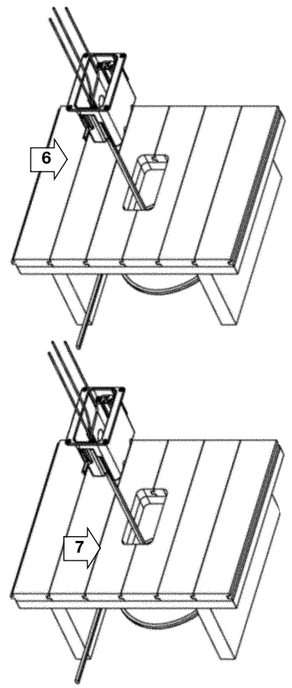

DUPLEX RECEPTACLE(S)

INSTALLATION INSTRUCTIONS

This device should be installed in accordance with all appropriate codes and standards. **Warning:** Turn off power to outlet box, using breaker or fuse at service entrance. Verify that power has been removed by testing with a circuit tester at the outlet box. **Caution:** This device is for use with copper or copper-clad wire only.

A. After removing power as described above, use strip gauge on back of outlet to strip all wires to desired length.

B. Attach wires according to the following diagram. Be sure the wires are fastened securely either by the terminal screws or through the speed-wire holes in the back of the outlet. *Loosely fastened wires may result in outlet failure and/or fire hazard. Attach wires using terminal screws or speed-wire holes: Not both!*

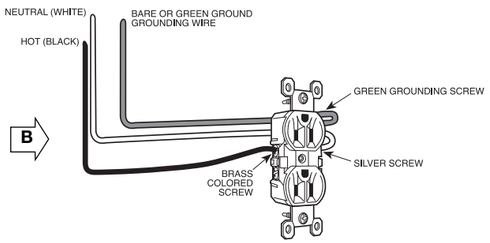

C. **If using terminal screws:** Terminal screws accept up to #12 AWG wire. Loop wires around screws in a counterclockwise fashion. Fasten terminal screws securely.

D. **If using speed-wire holes:** Fully insert #14 AWG solid copper wire only into the speed-wire holes. Do not use speed-wire holes for circuits greater than 15 amps. If outlet must be removed, insert screwdriver blade in the release slot and push it toward the front of the outlet, releasing the wire. Discard the outlet.

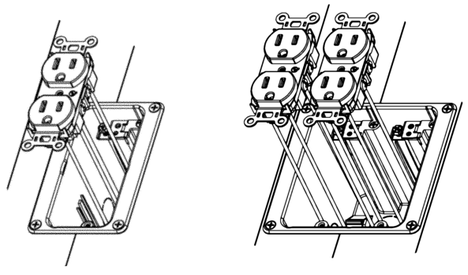

E. Use feed through wires only when wiring to another outlet downstream.

F. Mount the outlet to the box by sandwiching the device to the box with the intermediate sub-plate using provided #6-32 x 3/4" pan head mounting screws. Note: Orient the Sub-plate to say “THIS SIDE UP”.

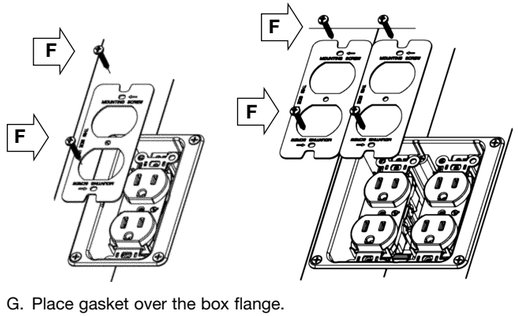

G. Place gasket over the box flange.

H. Assemble o-rings to the provided #6-32 x 1" oval head screws and use these to assemble the cover plate to the box. Torque to approximately 10 in/lbs ensuring the gasket stays in place under the cover plate.

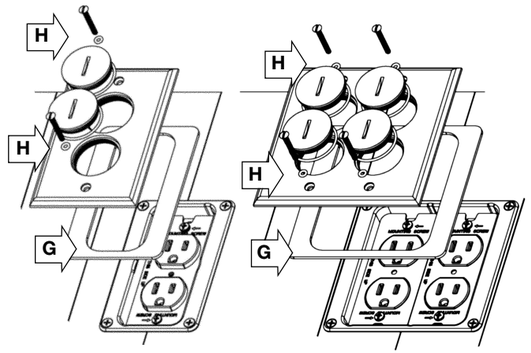

SINGLE RECEPTACLE

This device should be installed in accordance with all appropriate codes and standards. **Warning:** Turn off power to outlet box, using breaker or fuse at service entrance. Verify that power has been removed by testing with a circuit tester at the outlet box. **Caution:** This device is for use with copper or copper-clad wire only.

A. After removing power as described above, use strip gauge on back of outlet to strip all wires to desired length.

B. Attach wires according to the diagram below. Be sure the wires are fastened securely by the terminal screws.

Loosely fastened wires may result in outlet failure and/or fire hazard. Terminal screws accept up to #12 AWG wire. Loop wires around screws in a counterclockwise fashion. Fasten terminal screws securely.

C. Mount the outlet in box by screwing the strap directly to the box using provided #6-32 x 3/4" pan head mounting screws.

D. Place the shell over the single receptacle.

E. Place gasket over the box flange.

F. Assemble o-rings to the provided #6-32 x 1" oval head screws and use these to assemble the cover plate to the box. Torque to 10 in/lbs ensuring the gasket stays in place under the cover plate.

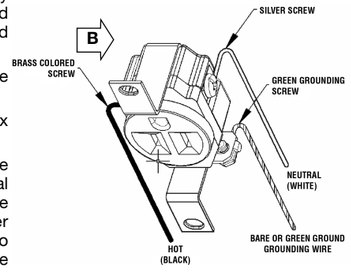

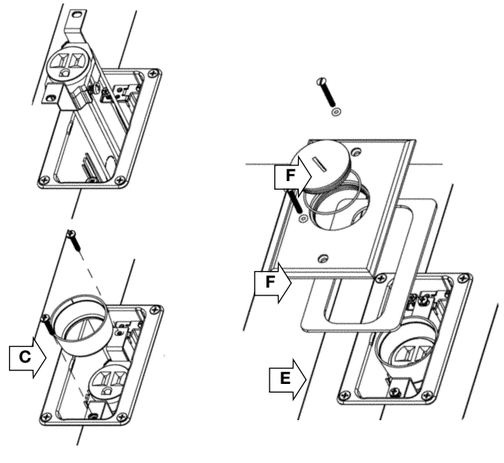

DATACOM KEYSTONE TWO & FOUR PORT

KEYSTONE JACKS

A. See the instructions enclosed with the product for specific wiring.

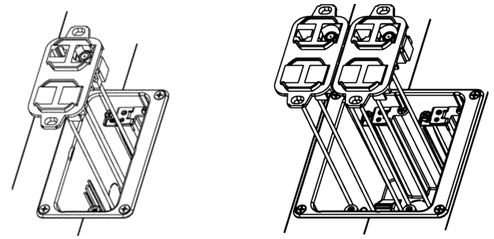

B. Mount the device in box by sandwiching the device to the box with the intermediate sub-plate using provided #6-32 x 3/4" pan head mounting screws. Note: Orient the Sub-plate to say “THIS SIDE UP”. For the two port, attach the device to the box by screwing the strap directly to the box using provided #6-32 x 3/4" pan head mounting screws.

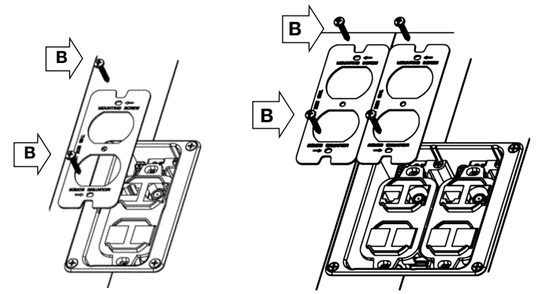

C. Place gasket over the box flange.

D. Assemble o-rings to the provided #6-32 x 1" oval head screws and use these to assemble the cover plate to the box. Torque to 10 in/lbs ensuring the gasket stays in place under the cover plate.

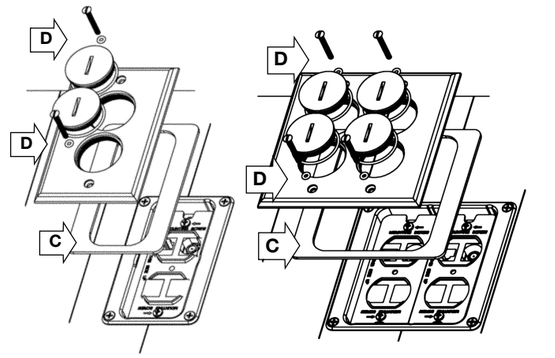

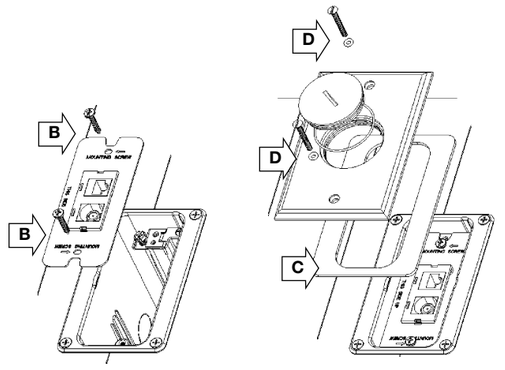

COMBO RECEPTACLE/KEYSTONE

This device should be installed in accordance with all appropriate codes and standards. **Warning:** Turn off power to outlet box, using breaker or fuse at service entrance. Verify that power has been removed by testing with a circuit tester at the outlet box. **Caution:** This device is for use with copper or copper-clad wire only.

A. After removing power as described above, use strip gauge on back of outlet to strip all wires to desired length.

B. Attach wires according to the diagram below. The terminal screws accept up to #12 AWG wire. Loop wires around screws in a counterclockwise fashion. Fasten terminal screws securely. *Loosely fastened wires may result in outlet failure and/or fire hazard.*

C. Ensure divider is in place in box to separate high voltage from low voltage. **WARNING:** FAILURE TO INSTALL DIVIDER CAN CAUSE FIRE, SERIOUS INJURY OR DEATH.

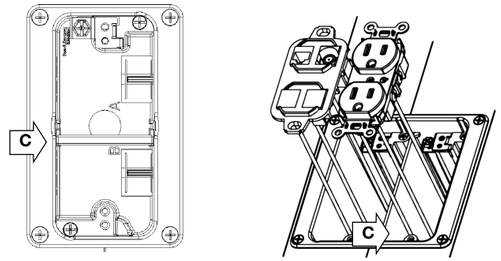

D. Assemble the desired Keystone Jack to the strap and wire per the instructions enclosed with the product.

E. Attach the device to the box by screwing the strap directly to the box using provided #6-32 x 3/4" pan head mounting screws. Note: Orient the Sub-plate to say “THIS SIDE UP”.

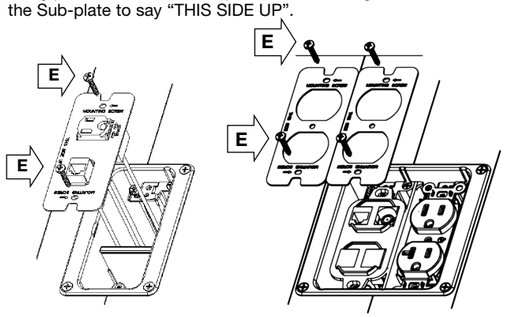

F. Place gasket over the box flange.
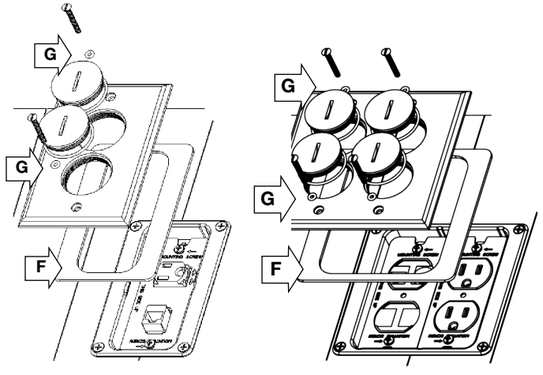
G. Assemble o-rings to the provided #6-32 x 1" oval head screws and use these to assemble the cover plate to the box. Torque to 10 in/lbs ensuring the gasket stays in place under the cover plate.