ITEM NO.	DESCRIPTION	QTY.
1	SURFACE HOUSING COVER	1
2	SURFACE HOUSING BASE	1
3	SECURITY SCREW	2

CATALOG NUMBER	COLOR	DESCRIPTION
ISB12W	WHITE	ASSY, ISB12 SERIES SURFACE HOUSING
ISB12OW	OFFICE WHITE	ASSY, ISB12 SERIES SURFACE HOUSING
ISB12GY	GREY	ASSY, ISB12 SERIES SURFACE HOUSING
ISB12BK	BLACK	ASSY, ISB12 SERIES SURFACE HOUSING
ISB12EI	ELECTRIC IVORY	ASSY, ISB12 SERIES SURFACE HOUSING
ISB12TI	TELCO IVORY	ASSY, ISB12 SERIES SURFACE HOUSING
ISB12AL	ALMOND	ASSY, ISB12 SERIES SURFACE HOUSING
ISB12LA	LIGHT ALMOND	ASSY, ISB12 SERIES SURFACE HOUSING

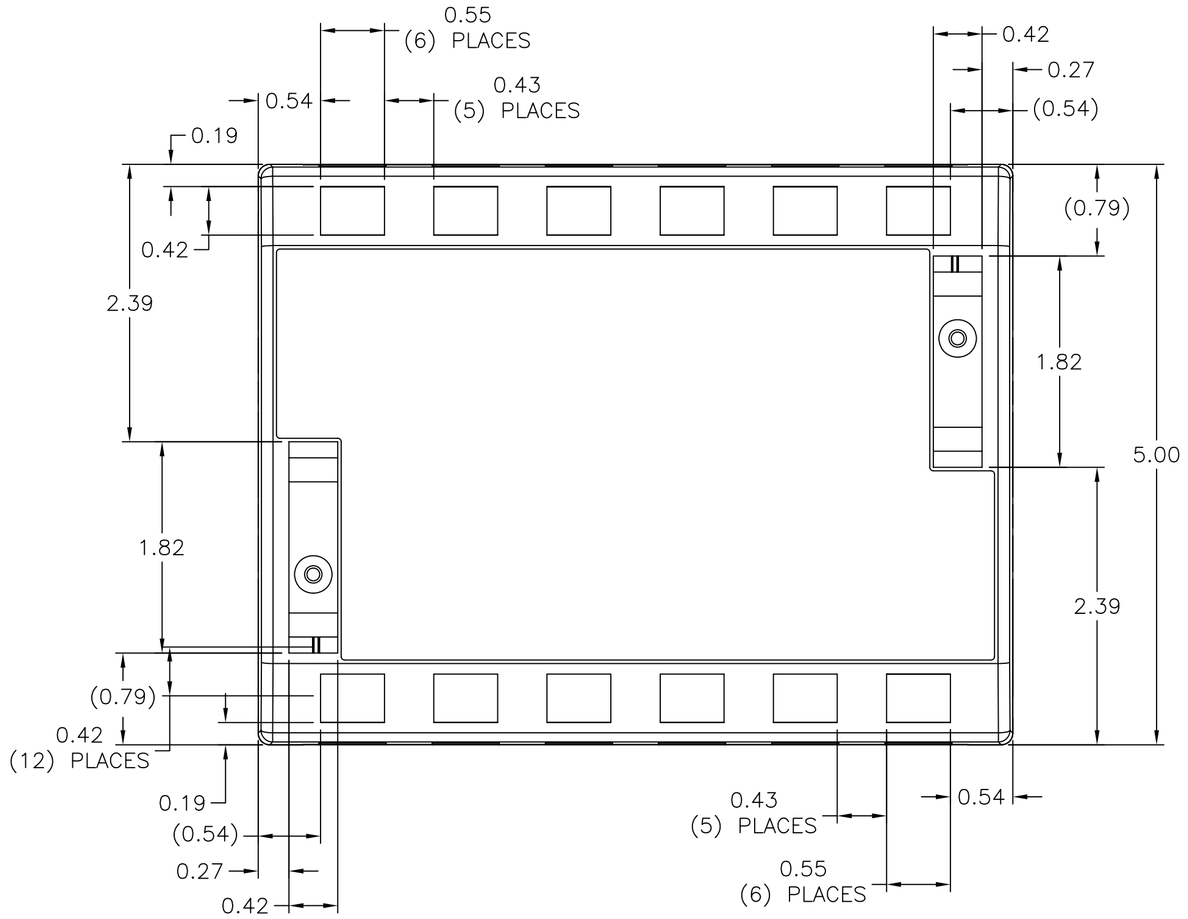

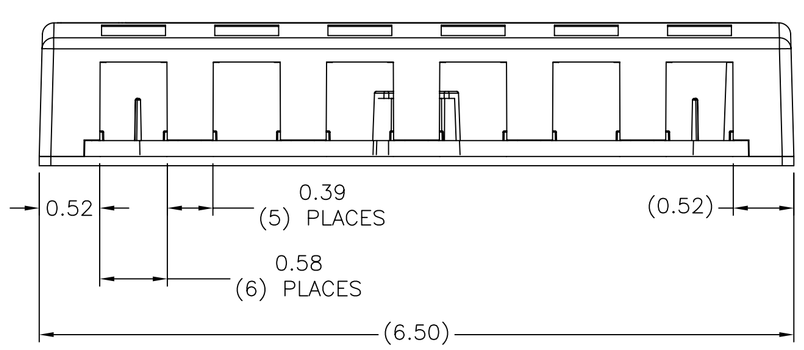

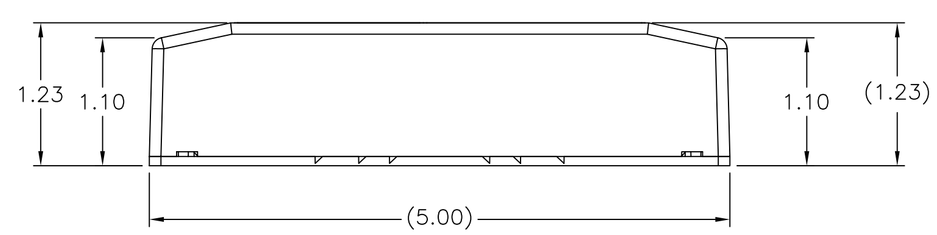

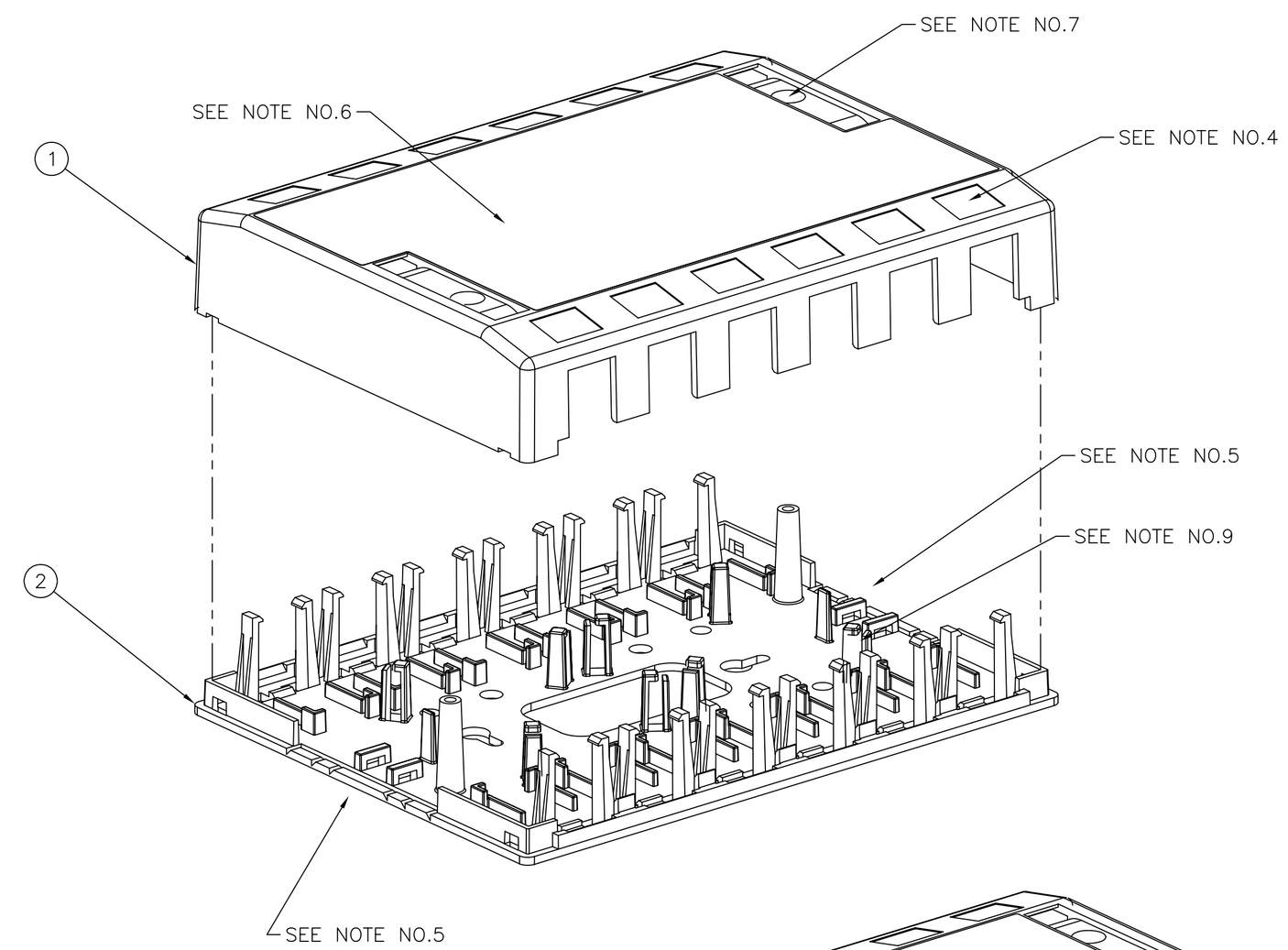

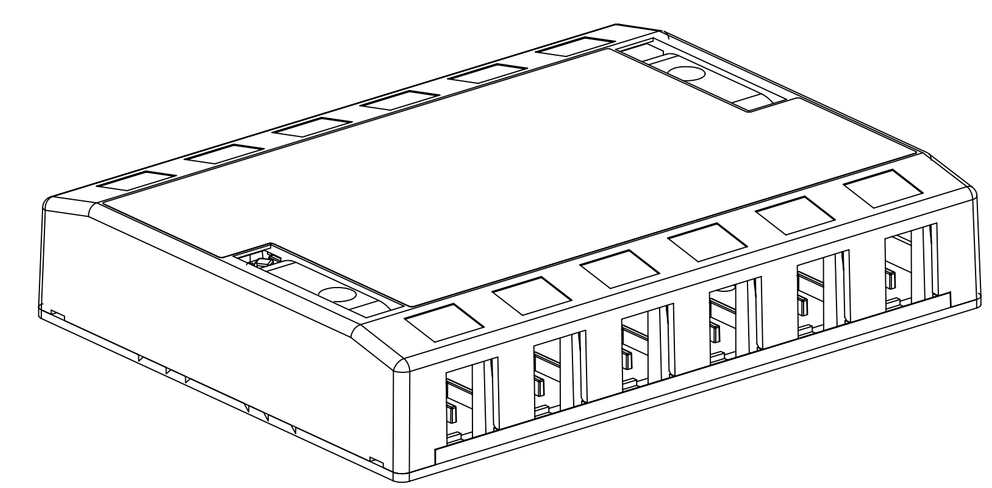

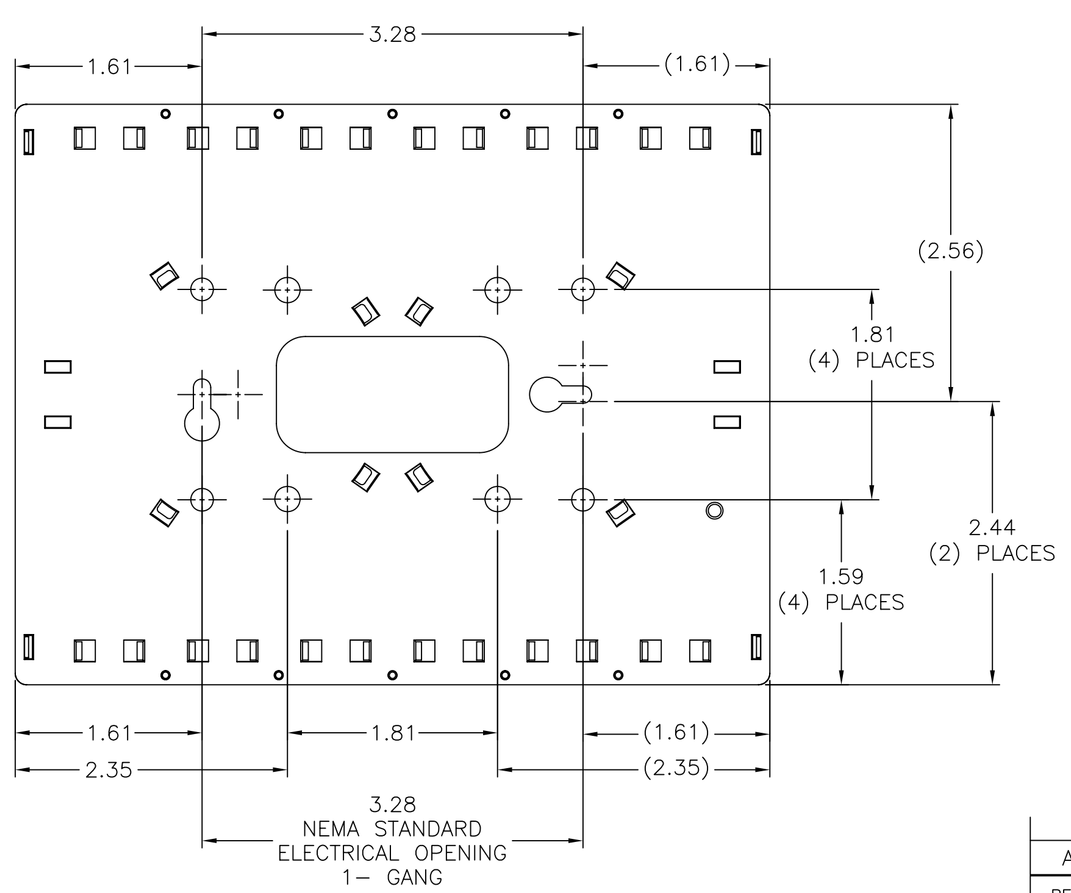

NOTES:

1. UL LISTED 1863
2. UL–94V–0 MATERIAL
3. CUL LISTED
4. PORT LABEL (XPLCRC10X)
5. RACEWAY KNOCKOUT MT6/7/8
6. STATION LABEL (XPLFP10X)
7. SECURITY SCREW
8. FIBER SPOOLING
9. SPECIFICATIONS SUBJECT TO CHANGE WITHOUT PRIOR NOTICE

REV.	ECN	DATE	DESCRIPTION	CHG BY	APPD BY
A	6524	2/13/09	INITIAL RELEASE	CG	

Created on AUTOCAD

DIMENSIONING AND TOLERANCE PER ANSI Y14.5M–1982
UNLESS OTHERWISE SPECIFIED, DIMENSIONS ARE IN INCHES (MM).
TOLERANCES
.XX = ±.01 (.25)
.XXX = ±.005 (.127)
.XXXX = ±.0025 (.0635)
ANGLE TOL ±1°

IN ACCEPTING OUR DRAWINGS, BLUEPRINTS, OR SUPPORTING DOCUMENTATION FOR QUOTATION OR OTHER PURPOSES, YOU AGREE NOT TO DISCLOSE TO OTHERS THE IDEAS, INFORMATION, OR DESIGNS SHOWN HEREIN, AND THAT YOU WILL MAKE NO USE OF SAME WITHOUT PERMISSION

PROJECT REFERENCE:

MATERIAL:

DRAWN BY: PAUL S. MAGUIRE 07/09/02

CHECKED BY:

APPROVED BY:

Hubbell Premise Wiring
HUBBELL INCORPORATED (Delaware)
14 Lord's Hill Road, Stonington, Connecticut 06378

TITLE: PLATES/HOUSINGS/FRAMES
SURFACE HOUSINGS
ASSY, ISB12 SURFACE HOUSING

SIZE: D | DRAWING NO.: HWS12762C | REV.: A

SCALE: 1/1 | SHEET 1 OF 1