DRAWING NO. SE211915

REV	DATE	DESCRIPTION	ECO	BY	C'H'K.
A	4/11/2008 12:00:00 AM	REDRAW INTO PRO-E & CATALOG NUMBER UPDATION.	16757	DG	BSK

CATALOG NO.	CONDUCTOR CODE (AWG)	CONDUCTOR NAVY ▷5	BOLT SIZE	FIG. NO.	B ±.06	C +.04	E ±.02	H REF.	K DIA. ±.02	L ±.09	N ±.04	O.D. ±.01	T REF.	Y MIN.	DIE INDEX	COLOR CODE	MECHANICAL MD7-34R MD6	MECHANICAL OUR840	MECHANICAL Y2MR	HYDRAULIC Y34A ▷7	HYDRAULIC Y750 Y35, BAT35 Y39, BAT750	HYDRAULIC Y46 ▷4	HYDRAULIC Y45 ▷3	DIELESS (# CRIMPS)	WIRE STRIP LENGTH
YAZ2C2TC10E2	#2 AWG [----]	60	#10 [M5]	1	1.25 [32]	.60 [15]	.75 [19]	----	.21 [5]	2.85 [72]	.25 [6]	.42 [11]	.11 [3]	1.03 [26]	10	BROWN	W2CVT W2CRT (2)	W2CVT W2CRT (2)	----	A2CR (2)	U2CRT (2)	U2CRT (2)	U2CRT (2)	MECHANICAL: MY29-11 (1) HYDRAULIC: Y644, Y644M Y644MBH, Y1000 Y1000BH (1)	1-5/16
YAZ2C2TC10E245				2				1.42 [36]		2.65 [67]															
YAZ2C2TC10E290				3				1.74 [44]		1.58 [40]															
YAZ2C2TC14			1/4 [M6]	1			.62 [16]	----	.27 [7]	2.85 [72]	.31 [8]			.96 [24]											
YAZ2C2TC1445				2				1.42 [36]		2.65 [67]															
YAZ2C2TC1490	#2 AWG [----]	60		3	1.25 [32]	.60 [15]		1.74 [44]		1.58 [40]		.42 [11]	.11 [3]		10	BROWN	W2CVT W2CRT (2)	W2CVT W2CRT (2)	----	A2CR (2)	U2CRT (2)	U2CRT (2)	U2CRT (2)		1-5/16

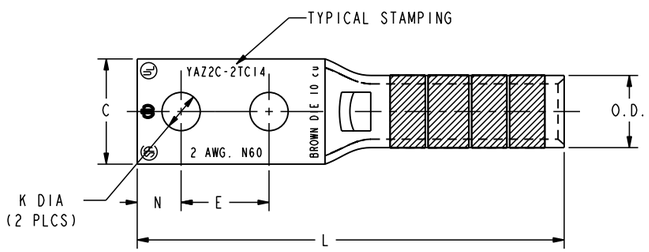

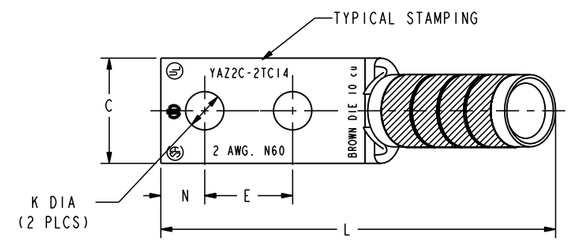

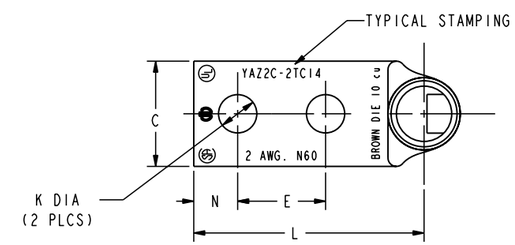

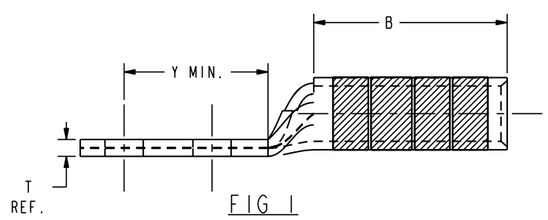

FIG 1

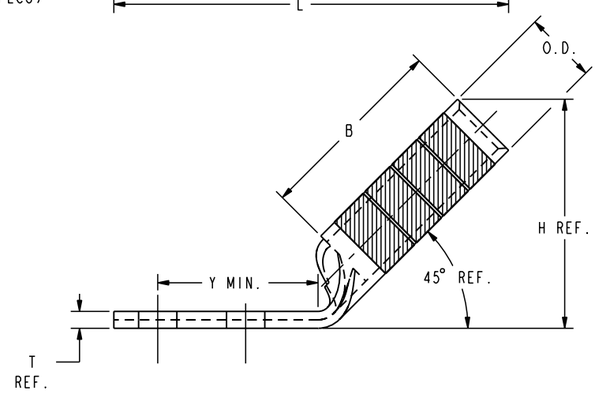

FIG 2

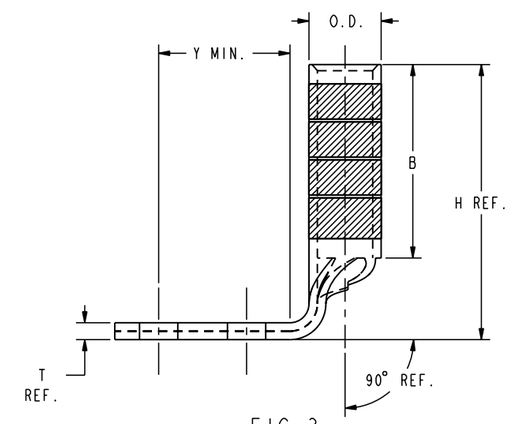

FIG 3

NOTES:

1. MATERIAL: COPPER TUBING.
2. FINISH: TIN PLATED
3. ▷ CATALOG # PT6515 ADAPTOR IS REQUIRED TO USE "U" DIES IN Y45 SERIES TOOLS.
4. ▷ CATALOG # PUADP-1 ADAPTOR IS REQUIRED TO USE "U" DIES IN Y46 SERIES TOOLS.
5. ▷ NAVY CABLE SIZE MAY BE OMITTED ON SOME SIZES BECAUSE OF SPACE LIMITATIONS.
6. DIMENSIONS, METRIC WIRE, & METRIC BOLT SIZES IN BRACKETS [ ] ARE IN MILLIMETERS. DIMENSIONS ARE ROUNDED OFF TO THE NEAREST MILLIMETER, UNLESS OTHERWISE NOTED, AND ARE FOR REFERENCE ONLY.
7. ▷ FOR USE BY CUSTOMERS THAT HAVE THIS HYPRESS™ NO NEW Y34A HYPRESS™ ARE BEING PROCESSED.

REV: PE0200

TO ORDER BURNDY® PRODUCTS CALL

UNITED STATES
1-800-346-4175 (LONDONDERRY, NH)

CANADA:
1-800-361-6975 (QUEBEC)
1-800-387-6487 (ALL OTHER PROVINCES)

FOR PRODUCT INFO: http://www.burndy.com

HYLUG™

ITEM NO: N/A
CAT. NO: YAZ2C-2TC- (SEE TABLE)
DRAWN BY: D.BOISVERT 11/12/98
CHECKER: K.HENRY 12/03/98
DSN APPVL: B.MACDONALD 12/02/98
MFG APPVL: N/A --
QA APPVL: S.GARY 11/30/98
MKT APPVL: B.HARDGROVE 11/25/98
PROD FAM: ---
PROJECT #: --
DOCUMENT TYPE: Sales
REL LEVEL: Released
SIZE: D
DRAWING NO: SE211915
REV: A
SHEET 13 OF 36
SCALE: 4:1

BURNDY