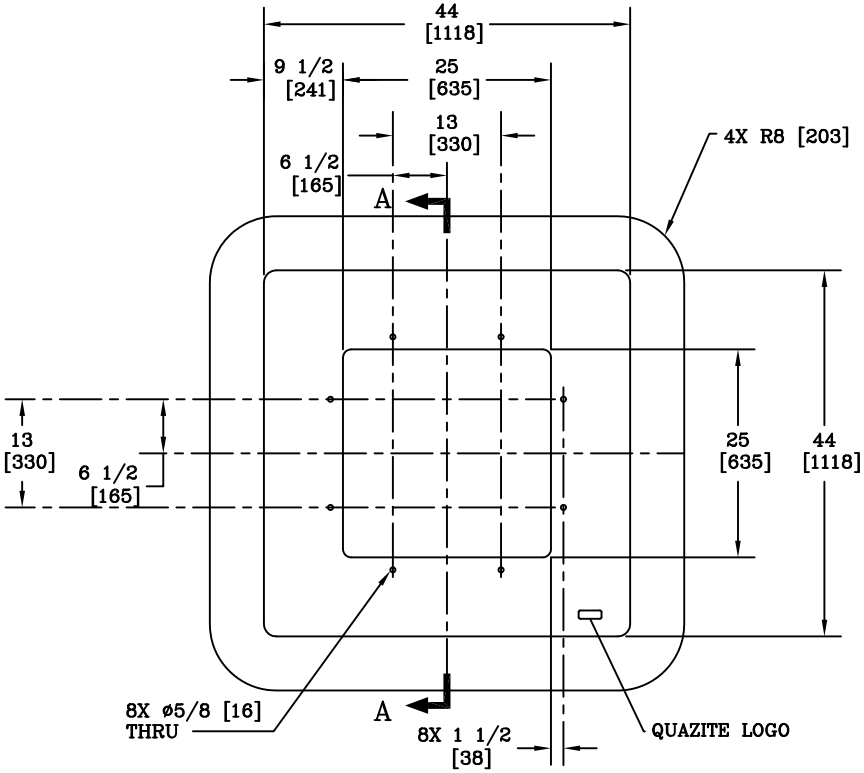

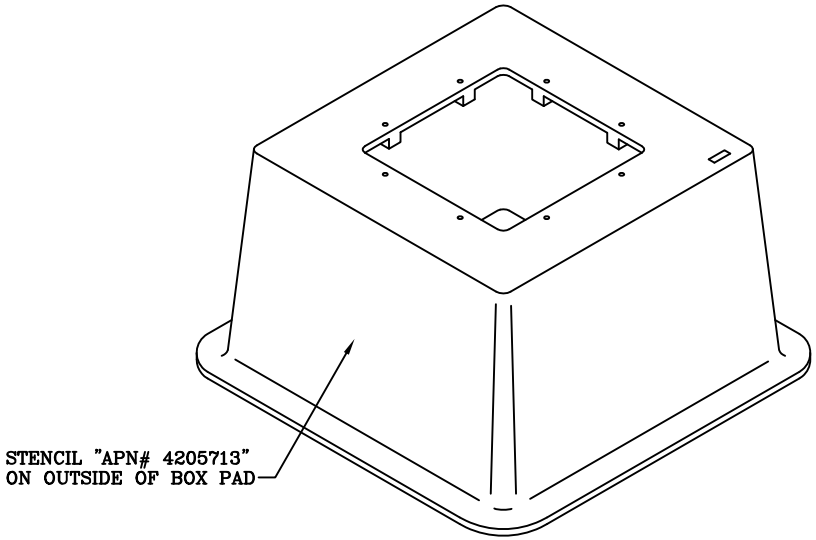

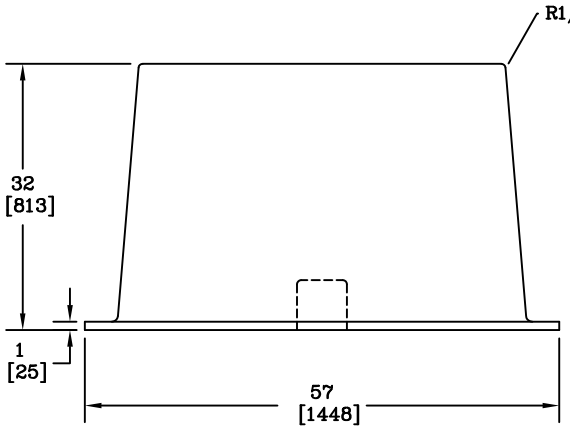

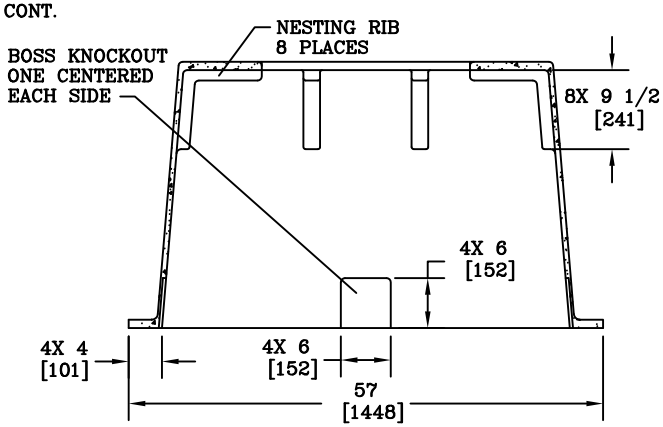

SECTION A–A

NOTE:

1. DIMENSIONS IN BRACKETS ARE IN MILLIMETERS UNLESS NOTED OTHERWISE.

DIMENSIONS ARE IN INCHES OR MILLIMETERS IN BRACKETS UNLESS OTHERWISE NOTED.

	BY	DATE	WEIGHT
DRN	JJP	5/13/09	514# 233kg
CHK	RJ	5/14/09	SCALE
ENG			3/4"=1'
APR	MEF	5/14/09	SIZE
APR			B

ESR OR PROJECT NUMBER 09503

HUBBELL®
3621 INDUSTRIAL PARK DR
LENOIR CITY, TN 37771
800-346-3062
www.quazite.com

LOC S

DRAWING DESCRIPTION

QUAZITE® BOX PAD

REV B

8/09

SHEET 1 OF 1

DRAWING NUMBER PB44442525E32