DRAWING NO. SD079848

REV	DATE	DESCRIPTION	ECO	BY	C'H'K.
G	05/19/2014 00:00:00 AM	NOTE ADDED AS PER ECO WARREP	36169	AD	BSB

CATALOG NUMBER 11	STRANDED COPPER CONDUCTOR ACCOMMODATED			BOLT SIZE	METRIC BOLT SIZE	DIMENSIONS								
	CODE (AWG)	NAVY	METRIC SIZE (CLASS 2)			B	C	D MIN. 11	K DIA.	L	N	O.D.	T REF.	Z MIN.
YA6CL4	#6 AWG	-----	-----	3/8	----	.54 [14]	.63 [16]	-----	.41 [10]	1.62 [41]	.41 [10]	.29 [7]	.06 [2]	.42 [11]
YA6CL6				1/2	M12	.54 [14]	.75 [19]	-----	.53 [13]	1.87 [48]	.53 [13]	.29 [7]	.12 [3]	.55 [14]
YA5CL	#5 AWG	30	-----	1/4	M6	.81 [21]	.44 [11]	-----	.27 [7]	1.65 [42]	.25 [6]	.30 [8]	.07 [2]	.33 [8]

CONNECTOR SIZE	TOLERANCES					
	B	C	K DIA.	L	N	O.D.
-8C THRU -25	±.06	±.04	±.02	±.09	±.03	±.01
-26 THRU -34	±.08	±.04	±.02	±.12	±.03	±.01
-35 AND UP	±.09	±.06	±.02	±.15	±.06	±.01

TOLERANCE BLOCK

INSTALLATION TOOLING (# CRIMPS)

CATALOG NUMBER 13	COLOR CODE	DIE INFORMATION		MECHANICAL				HYDRAULIC							DIELESS (# OF CRIMPS)	WIRE STRIP LENGTH
		DIE INDEX	TYPE	YIMRTC 6	OUR840	MD6 MD7	MD6--R2 MD7-34R	Y500CT PATMD6 PAT600	Y34A 8 Y34B Y34BH	Y35, Y39, PAT750 Y750, BAT35 PAT750 5	Y46 PAT46 4 5	Y45 3 5	Y48B	Y60BHU		
YA6CL4 YA6CL6 YA5CL	BLUE	7 374	BLUE DIE SET	BLUE (1)	X5CRT(1) X8CART(1)	X5CRT(1) W5CRT(1) W5CVT(1) X8CART(1)	X5CRT(1) W5CRT(1) W5CVT(1) X8CART(1)	X5CRT(1) X8CART(1) W5CRT(1) W5CVT(1)	-----	U5CRT(1) U8CABT(1)	U5CRT(1) U8CABT(1)	U5CRT(1) U8CABT(1)	-----	-----	MECHANICAL: MY29-3 (1) MY29-11 (1) MRC840 (1) HYDRAULIC: Y644 (1) Y81KFT (1) Y4PC834 (1)	9/16"
			NEST	----	----	-----	-----	-----	A6CD(1) B6CD(1)	U6CD-1(1)	U6CD-1(1)	U6CD-1(1)	-----	-----		
			INDENTOR						Y34PR	Y34PR	Y34PR	Y34PR				

NOTES:

1. MATERIAL: COPPER TUBING.
2. FINISH: TIN PLATED. "FOR ALTERNATIVE FINISH ADD ONE OF THE FOLLOWING SUFFIXES: NICKEL = NK, LEAD = LD, BARE = BR"

3> CATALOG # PT6515 ADAPTOR IS REQUIRED TO USE "U" DIES IN Y45 SERIES TOOLS.

4> CATALOG # PUADP-1 ADAPTOR IS REQUIRED TO USE "U" DIES IN Y46 SERIES TOOLS.

5> Y35P3 INDENTOR ADAPTOR REQUIRED FOR Y34PR INDENTOR.

6> PERMANENT DIE IN TOOLING.

7. DIMENSIONS IN BRACKETS [ ] ARE IN MILLIMETERS ROUNDED OFF TO THE NEAREST MILLIMETER, UNLESS OTHERWISE NOTED, AND ARE FOR REFERENCE ONLY.

8> FOR USE BY CUSTOMERS THAT HAVE THIS HYPRESS™. NO NEW Y34A HYPRESS™ TOOLS ARE BEING PROCESSED. Y34A USES A--D NEST DIES ONLY.

9> CONNECTORS ARE UL LISTED; UNDRILLED VERSIONS ARE NOT UL LISTED.

10> CONNECTORS ARE CSA CERTIFIED. UNDRILLED VERSIONS ARE NOT CSA CERTIFIED.

11> FOR UNDRILLED VERSIONS ADD SUFFIX "-U" TO END OF CATALOG NUMBER. FOR UNDRILLED VERSIONS, USE D MIN. = N MAX. + Z MIN.

12. "X", "W-RT", "W-VT", "U" & "L" DIE SETS ARE COLOR CODED. "A", "B" AND "C" DIES ARE NOT COLOR CODED. NESTS AND INDENTOR TYPE ARE NOT COLOR CODED.

13> X8CABT & U8CABT DIES USED ON YA6C-- HYLUG™ NOT YA5C--HYLUG™

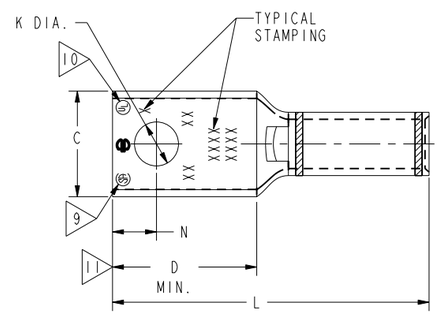

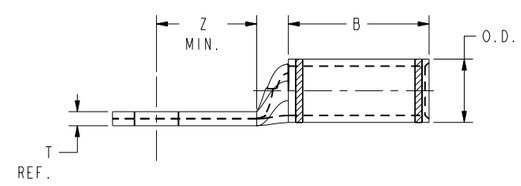

REFERENCE: SE209240

TO ORDER BURNDY® PRODUCTS CALL

UNITED STATES
1-800-346-4175 (LONDONDERRY, NH)

CANADA:
1-800-361-6975 (QUEBEC)
1-800-387-6487 (ALL OTHER PROVINCES)

FOR PRODUCT INFO: http://www.burndy.com

HYLUG™ COPPER

ITEM NO: N/A		
CAT. NO: YA-L, YA-L-TC-, YAV-TC-		
DRAWN BY: C.RACCANO	6/16/77	BURNDY
CHECKER: CAR	6/16/77	
DSN APPVL: LB	6/24/77	
MFG APPVL: N/A	N/A	
QA APPVL: C.ACKERMAN	9/30/94	
MKT APPVL: T.NELSON	9/7/94	SCALE: 1:1
PROD FAM: CM&R COMPRESSION	DRAWING NO	REV
PROJECT #: -- / SIZE	SD079848	G
DOCUMENT TYPE: Sales / D		
REL LEVEL: Released	SHEET 3 OF 17	

REV: PE0200