DRAWING NO. SD079848

REV	DATE	DESCRIPTION	ECO	BY	C'H'K.
C	05/19/2014 00:00:00 AM	NOTE ADDED AS PER ECO WARNUP	36169	AD	BSB

CATALOG NUMBER <1>	STRANDED COPPER CONDUCTOR ACCOMMODATED			BOLT SIZE	METRIC BOLT SIZE	DIMENSIONS							
	CODE (AWG)	NAVY	METRIC SIZE (CLASS 2)			B	C	K DIA.	L	N	O.D.	T REF.	Z MIN.
YAICL2	#1 AWG	75	-----	1/4	M6	.88 [22]	.68 [17]	.27 [7]	1.81 [46]	.25 [6]	.46 [12]	.10 [3]	.33 [8]
YAICL				5/16	----		.68 [17]	.33 [8]	1.94 [49]	.34 [9]		.10 [3]	.36 [9]
YAICL4				3/8	----		.68 [17]	.40 [10]	2.06 [52]	.41 [10]		.10 [3]	.42 [11]
YAICL6				1/2	M12	.88 [22]	.73 [19]	.53 [13]	2.37 [60]	.53 [13]	.46 [12]	.09 [2]	.55 [14]

CONNECTOR SIZE	TOLERANCES					
	B	C	K DIA.	L	N	O.D.
-8C THRU -25	±.06	±.04	±.02	±.09	±.03	±.01
-26 THRU -34	±.08	±.04	±.02	±.12	±.03	±.01
-35 AND UP	±.09	±.06	±.02	±.15	±.06	±.01

TOLERANCE BLOCK

INSTALLATION TOOLING (# CRIMPS)

CATALOG NO.	COLOR CODE	DIE INFORMATION		MECHANICAL RATCHET				HYDRAULIC							DIELESS (# CRIMPS)	WIRE STRIP LENGTH
		DIE INDEX	TYPE	YIMRTC <6>	OUR840	MD6 MD7	MD6--R2 MD7-34R	Y500CT PATMD6 PAT600	Y34A <8> Y34B Y34BH	Y35, Y39 Y750, BAT35 PAT750 <5>	Y46 <4><5> PAT46	Y45 <3><5>	Y48B	Y60BHU		
YAICL2 YAICL YAICL4 YAICL6	GREEN	11 375	GREEN DIE SET	GREEN (2)	XICRT-1(1)	XICRT-1(1) WICRT-1(1) WICVT(1)	XICRT-1(1) WICRT-1(1) WICVT(1)	XICRT-1(1) WICRT-1(1) WICVT(1)	-----	UICRT-1 (1) U4CABT (1)	UICRT-1 (1) U4CABT (1)	UICRT-1 (1) U4CABT (1)	-----	-----	MECHANICAL MY29-3(1) MY29-11(1) MRC840 (1) HYDRAULIC: Y644 (1) Y81KFT (1) Y4PC834 (1)	15/16"
			NEST	----	----	-----	-----	-----	AICD(1) BICD(1)	UICD-1(1)	UICD-1(1)	UICD-1(1)				
			INDENTOR						Y34PR	Y34PR	Y34PR	Y34PR				

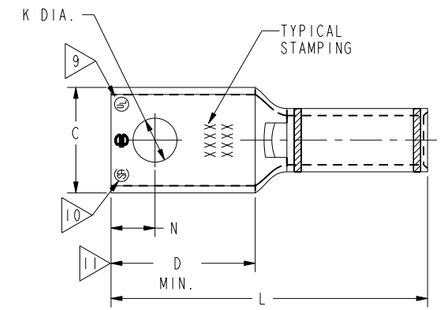

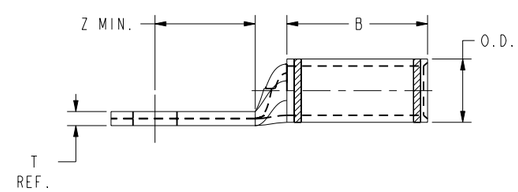

NOTES:

1. MATERIAL: COPPER TUBING.
2. FINISH: TIN PLATED.
   "FOR ALTERNATIVE FINISH ADD ONE OF THE FOLLOWING SUFFIXES:
   NICKEL = NK, LEAD = LD, BARE = BR"
3. <3> CATALOG # PT6515 ADAPTOR IS REQUIRED TO USE "U" DIES IN Y45 SERIES TOOLS.
4. <4> CATALOG # PUADP-1 ADAPTOR IS REQUIRED TO USE "U" DIES IN Y46 SERIES TOOLS.
5. <5> Y35P3 INDENTOR ADAPTOR REQUIRED FOR Y34PR INDENTOR.
6. <6> PERMANENT DIE IN TOOLING.
7. DIMENSIONS IN BRACKETS [ ] ARE IN MILLIMETERS ROUNDED OFF TO THE NEAREST MILLIMETER, UNLESS OTHERWISE NOTED, AND ARE FOR REFERENCE ONLY.
8. <8> FOR USE BY CUSTOMERS THAT HAVE THIS HYPRESS™. NO NEW Y34A HYPRESS™ TOOLS ARE BEING PROCESSED. Y34A USES A--D NEST DIES ONLY.
9. <9> CONNECTORS ARE UL LISTED; UNDRILLED VERSIONS ARE NOT UL LISTED.
10. <10> CONNECTORS ARE CSA CERTIFIED; UNDRILLED VERSIONS ARE NOT CSA CERTIFIED.
11. <11> FOR UNDRILLED VERSIONS ADD SUFFIX "-U" TO END OF CATALOG NUMBER. FOR UNDRILLED VERSIONS, USE D MIN. = N MAX. + Z MIN.
12. "X", "W-RT", "W-VT", "U" & "L" DIE SETS ARE COLOR CODED. "A", "B" AND "C" DIES ARE NOT COLOR CODED. NESTS AND INDENTOR TYPE ARE NOT COLOR CODED.

REFERENCE: SE209240

REV: PE0200

TO ORDER BURNDY® PRODUCTS CALL

UNITED STATES
1-800-346-4175 (LONDONDERRY, NH)

CANADA:
1-800-361-6975 (QUEBEC)
1-800-387-6487 (ALL OTHER PROVINCES)

FOR PRODUCT INFO: http://www.burndy.com

COPPER HYLUG™

ITEM NO:	N/A
CAT. NO:	YA-L, YA-L-TC-, YAV-TC-
DRAWN BY:	J.MICHAUD 8/9/94
CHECKER:	D.FILLION 10/3/94
DSN APPVL:	C.PALAGI 8/10/94
MFG APPVL:	N/A N/A
QA APPVL:	C.ACKERMAN 9/30/94
MKT APPVL:	T.NELSON 9/7/94
SCALE:	1:1
PROD FAM:	CM&R COMPRESSION
PROJECT #:	--
DOCUMENT TYPE:	Sales
REL LEVEL:	Released
SIZE	D
DRAWING NO	SD079848
REV	C
SHEET 7 OF 17	

BURNDY