FITTINGS

MOL SERIES

MOGUL CONDUIT BODIES

MOLB-4

MOLB-5 thru 0

MOLB-6CG

MLB-12

- Suitable for wet locations when used with gasketed covers.
- Federal Specification W-C-586D / A-A 50563.
- Suitable for use in hazardous location applications when installed according to NEC Articles 501.10(b), Class I, Div. 2, (Suitable for use in Class I Zone 2 applications) 502.10, and 503.10.

FEATURES-SPECIFICATIONS

Applications

- Mogul fittings are normally used where the standard "O" Series conduit bodies do not offer a sufficient amount of wiring room
- For right angle bends where splices, pulls and taps are needed in a weather-proof chamber

Features

- A raised dome cover provides additional wiring room
- Furnished with cover and gasket

Material/Finish

Copper-free Aluminum
(less than 4/10 of 1%)

- Electrostatically applied powder coating

Dimensions

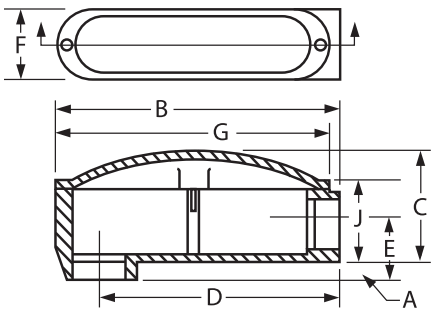

MOL CONDUIT BODIES									
CATALOG NUMBER	CONDUIT SIZE	DIMENSIONS							
		A	B	C	D	E	F	G	J
MOLB-4*	1-1/4"	5/16" (8)	9-3/4" (248)	2-3/4" (70)	8-1/2" (445)	1" (25)	2-3/8" (60)	9-1/8" (232)	2-3/4" (70)
MOLB-5	1-1/2"	1-5/16" (33)	13-3/16" (335)	4-3/4" (121)	11-1/2" (292)	2-3/8" (60)	3-1/8" (79)	12-7/8" (327)	3-3/8" (86)
MOLB-6	2"	1-1/16" (27)	13-3/16" (335)	4-1/4" (108)	11-1/2" (292)	2-1/2" (64)	3-1/8" (79)	12-7/8" (327)	3-3/8" (86)
MOLB-6CG*	2"	1/16" (2)	14-1/2" (368)	5-3/4" (146)	13" (330)	1-3/8" (35)	3" (76)	14-1/8" (359)	3-5/16" (84)
MOLB-7	2-1/2"	1-13/16" (46)	22-5/8" (575)	6-1/4" (159)	20" (508)	3-15/16" (100)	4-7/16" (113)	21-13/16" (554)	4-7/16" (113)
MOLB-8	3"	1-13/16" (46)	22-5/8" (575)	6-1/4" (169)	20" (508)	3-15/16" (100)	4-7/16" (113)	21-13/16" (554)	4-7/16" (113)
MOLB-9	3-1/2"	1-9/16" (40)	28-11/16" (729)	7-7/8" (200)	25-9/16" (649)	4-3/16" (106)	5-1/2" (140)	28-5/16" (719)	5-1/2" (140)
MOLB-0	4"	1-9/16" (40)	28-11/16" (729)	7-7/8" (200)	25-7/16" (646)	4-3/16" (106)	5-1/2" (140)	28-5/16" (719)	5-1/2" (140)
MLB-12*	5"	2-3/8" (68)	43-1/4" (1099)	12-1/4" (311)	38-5/8" (981)	6-1/4" (159)	9" (229)	42-1/2" (1080)	8-11/16" (221)

*Split cover design

MOL BLANK REPLACEMENT COVERS AND GASKETS	
CATALOG NUMBER	BODY STYLE
MOL-560	1-1/2" & 2"
MOL-780	2-1/2" & 3"
MOL-900	3-1/2" & 4"