| CAT NO. | TRADE SIZE | A | B | C | D | E |
|---|---|---|---|---|---|---|
| 2082 | 1/2" | 1.63 [41.4] | 0.77 [19.6] | 0.25 [6.4] | 0.72 [18.3] | 0.63 [16] |
| 2083 | 3/4" | 2.19 [55.6] | 1 [25.4] | 0.28 [7.1] | 0.92 [23.4] | 0.63 [16] |
| 2084 | 1" | 2.56 [65] | 1.28 [32.5] | 0.28 [7.1] | 1.17 [29.7] | 0.75 [19.1] |
| 2085 | 1 1/4" | 3.13 [79.5] | 1.64 [41.7] | 0.28 [7.1] | 1.53 [38.9] | 0.88 [22.4] |
| 2086 | 1 1/2" | 3.51 [89.1] | 1.93 [49.2] | 0.39 [9.8] | 1.77 [45.0] | 0.99 [25.1] |
| 2088 | 2" | 3.96 [100.6] | 2.45 [62.2] | 0.47 [11.9] | 2.19 [55.6] | 1.09 [27.7] |

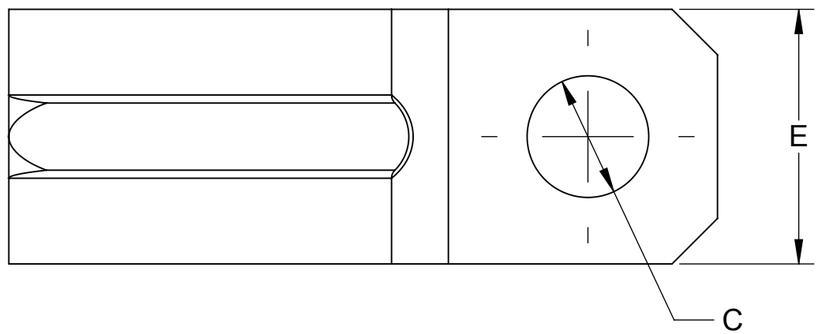


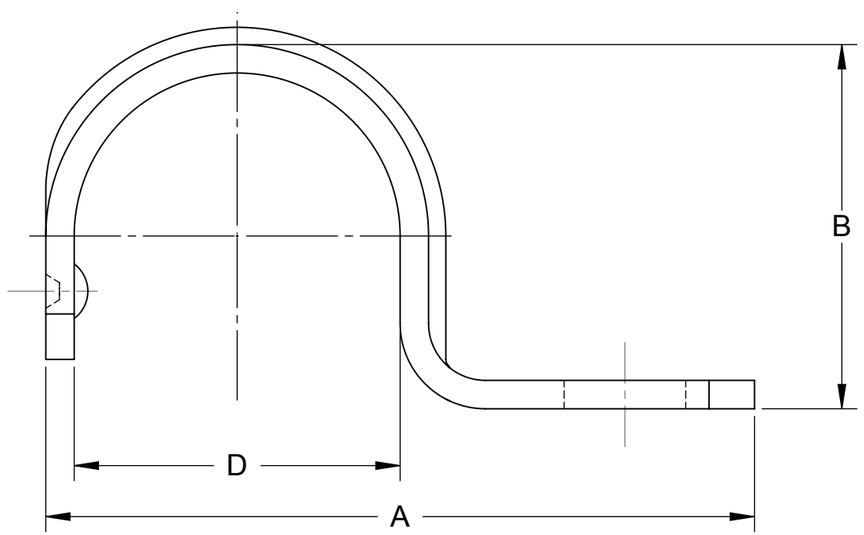


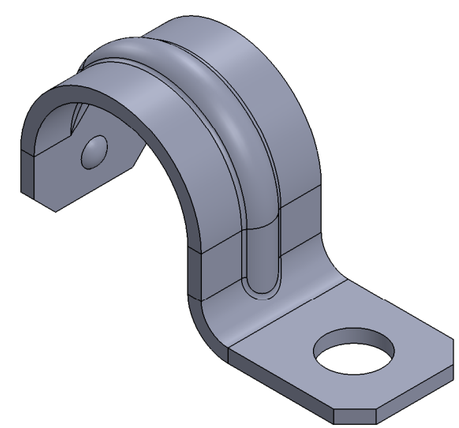

NOTES:
1. ALL DIMENSIONS ARE IN INCHES AND [MILLIMETERS].
2. 2082-2088 ARE UL LISTED.

**LIST OF PARTS**

| DESCRIPTION | MATERIAL | FINISH |
|---|---|---|
| ONE HOLE STRAPS EMT | STEEL | GALVANIZED |

FILE NO. :
ONE HOLE STRAPS EMT CUS

| SYM. | REVISION DESCRIPTION | APP | DATE |
|---|---|---|---|
| | INITIAL RELEASE | F.P | 06/25/2015 |

THE DESIGN AND DIMENSIONS OF THE PRODUCT SHOWN ON THIS DRAWING ARE SUBJECT TO CHANGE WITHOUT NOTICE

DIMENSION SHEET FOR CAT. NO.
SEE CHART

TITLE:
**ONE HOLE STRAPS**

TOLERANCE UNLESS OTHERWISE SPECIFIED
.XX DECIMAL ±.015
.XXX DECIMAL ±.005
ANGLE ±2°

**RACO**
South Bend, Indiana

| | | |
|---|---|---|
| DRAWN BY: | F.PAUL | SCALE: 3:1 |
| APP. BY: | X.X. | |
| DATE: | 06/16/2015 | |

SIZE: **B**