Switches, Three Way
15A, 120-277V AC
Specification Grade Commercial Switch

HUBBELL

Features

- Thread cleaning captive mounting screw
- Abuse resistant nylon toggle
- Steel, zinc plated bridge is corrosion resistant

Ordering Information

Description	Toggle Color	UPC	Catalog Number
Toggle, side wired only	Brown	783585902005	CS315

Listings

UL Listed
CSA Certified
Fed. Spec. W-S-896

Specifications

Top Material	Thermoplastic, Gray
Base Material	Thermoplastic, Black
Toggle Material	Nylon
Contacts	Silver Alloy
Terminal Screws	Brass
Auto Grounding Mounting Bridge	Zinc Plated Steel
Ground Screw	Brass (Green)

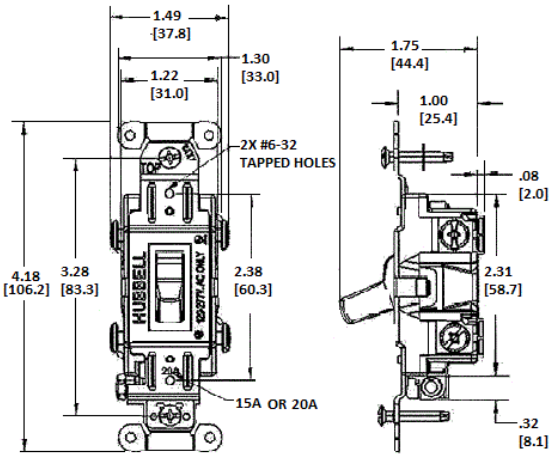

Performance

Electrical

Dielectric Voltage	Withstands 1500V AC minimum for 1 minute
Max. Continuous Current	15A
Max. Working Voltage	277V AC
Overload	Minimum 4.8 times rated current for 100 cycles
Temperature Rise	30°C maximum at rated current

Mechanical

Terminal Accommodations	#14 AWG min. - #10 AWG max. solid and stranded copper wire only

Environmental

Flammability	UL 94V-2
Operating Temperature	Max. continuous: 75°C; Min. continuous: -40°C without impact

Online Resources

Customer Use Drawing
eCatalog

Dimensions in Inches (mm)

Hubbell Wiring Device-Kellems • Hubbell Incorporated (Delaware) • 40 Waterview Drive • Shelton, CT 06484
Phone (800) 288-6000 • Fax (800) 255-1031 • Specifications subject to change without notice.

HUBBELL®
Wiring Device-Kellems