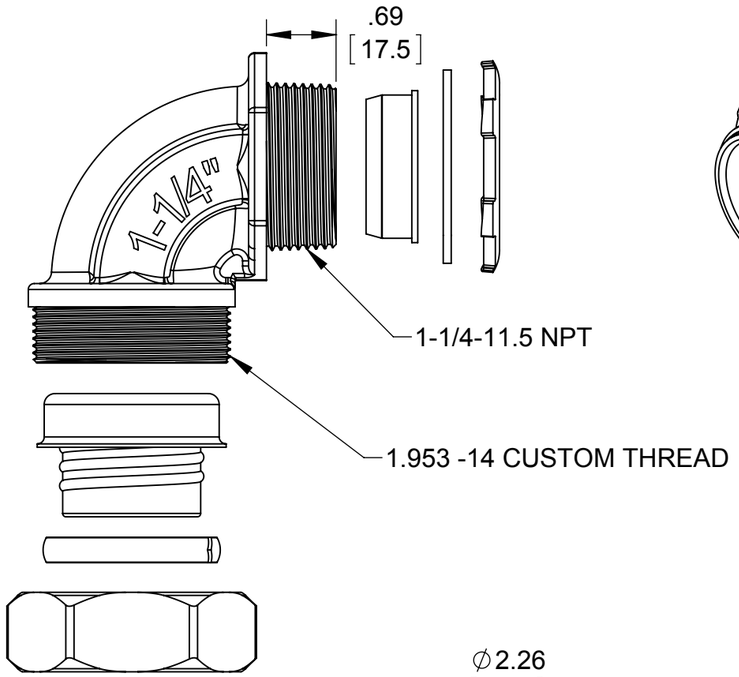

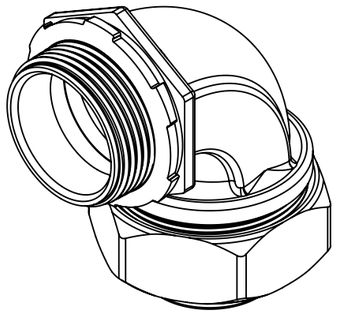

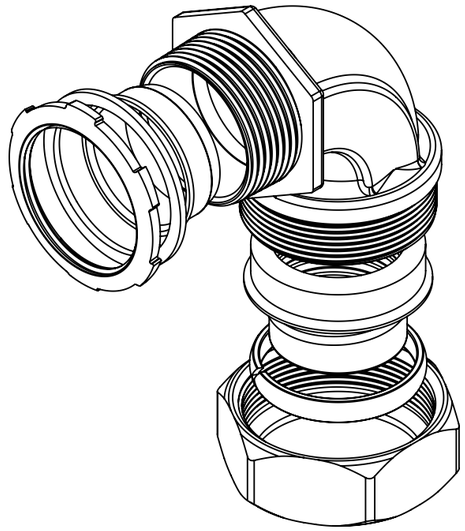

LIST OF PARTS		
DESCRIPTION	MATERIAL	FINISH
90° BODY	MALEABLE IRON	GALVANIZED
FERRULE	STEEL	GALVANIZED
GLAND RING	NYLON	YELLOW
COMPRESSION NUT	MALEABLE IRON	GALVANIZED
WASHER	NYLON	YELLOW
LOCK NUT	STEEL	GALVANIZED
INSULATION BUSHING	NYLON	YELLOW

FILE NO. :

3545 CUS

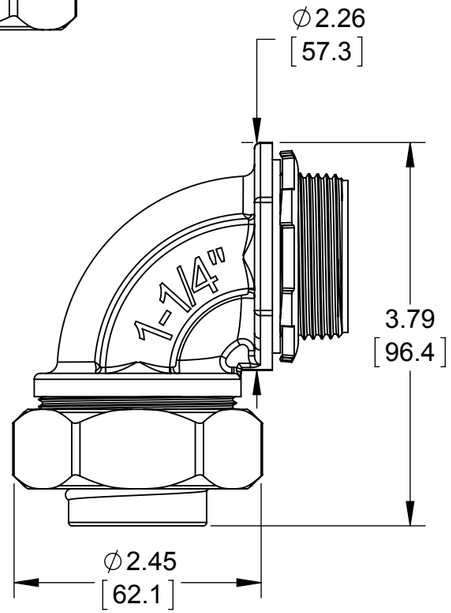

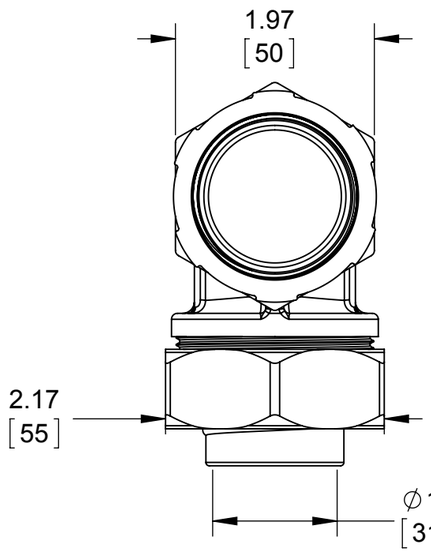

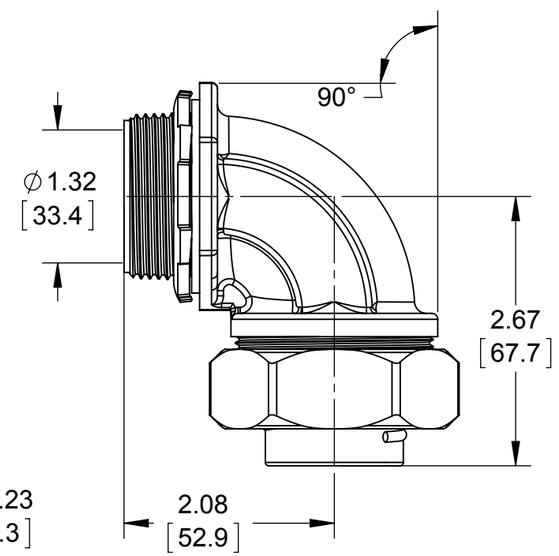

NOTES:
1. ALL DIMENSIONS ARE IN INCHES AND [MILLIMETERS]
2. cULus LISTED

SYM.	REVISION DESCRIPTION	APP	DATE
	INITIAL RELEASE	J.R.	03/25/2015

THE DESIGN AND DIMENSIONS OF THE PRODUCT SHOWN ON THIS DRAWING ARE SUBJECT TO CHANGE WITHOUT NOTICE

TITLE:

3545 1-1/4" LIQUIDTIGHT INSULATED 90° CONNECTOR

3545

DIMENSION SHEET FOR CAT. NO.

TOLERANCE UNLESS OTHERWISE SPECIFIED

.XX DECIMAL ±.015
.XXX DECIMAL ±.005
ANGLE ±2°

RACO
South Bend, Indiana

DRAWN BY:	J.R.	SCALE: 2:3
APP. BY:	M.C.	
DATE:	03/25/2015	

SIZE: B