CONDENSING UNIT

AIR CONDITIONING
INSTALLATION & SERVICE REFERENCE

© 2014, 2016-2018 Goodman Manufacturing Company, L.P.
5151 San Felipe, Suite 500, Houston, TX 77056
www.goodmanmfg.com -or- www.amana-hac.com
P/N: IO-449E Date: January 2018

Important Safety Instructions

The following symbols and labels are used throughout this manual to indicate immediate or potential safety hazards. It is the owner's and installer's responsibility to read and comply with all safety information and instructions accompanying these symbols. Failure to heed safety information increases the risk of personal injury, property damage, and/or product damage.

⚠ WARNING

HIGH VOLTAGE !

DISCONNECT ALL POWER BEFORE SERVICING. MULTIPLE POWER SOURCES MAY BE PRESENT. FAILURE TO DO SO MAY CAUSE PROPERTY DAMAGE, PERSONAL INJURY OR DEATH.

⚠ WARNING

ONLY PERSONNEL THAT HAVE BEEN TRAINED TO INSTALL, ADJUST, SERVICE OR REPAIR (HEREINAFTER, "SERVICE") THE EQUIPMENT SPECIFIED IN THIS MANUAL SHOULD SERVICE THE EQUIPMENT. THE MANUFACTURER WILL NOT BE RESPONSIBLE FOR ANY INJURY OR PROPERTY DAMAGE ARISING FROM IMPROPER SERVICE OR SERVICE PROCEDURES. IF YOU SERVICE THIS UNIT, YOU ASSUME RESPONSIBILITY FOR ANY INJURY OR PROPERTY DAMAGE WHICH MAY RESULT. IN ADDITION, IN JURISDICTIONS THAT REQUIRE ONE OR MORE LICENSES TO SERVICE THE EQUIPMENT SPECIFIED IN THIS MANUAL, ONLY LICENSED PERSONNEL SHOULD SERVICE THE EQUIPMENT. IMPROPER INSTALLATION, ADJUSTMENT, SERVICING OR REPAIR OF THE EQUIPMENT SPECIFIED IN THIS MANUAL, OR ATTEMPTING TO INSTALL, ADJUST, SERVICE OR REPAIR THE EQUIPMENT SPECIFIED IN THIS MANUAL WITHOUT PROPER TRAINING MAY RESULT IN PRODUCT DAMAGE, PROPERTY DAMAGE, PERSONAL INJURY OR DEATH.

⚠ CAUTION

SCROLL EQUIPPED UNITS SHOULD NEVER BE USED TO EVACUATE THE AIR CONDITIONING SYSTEM. VACUUMS THIS LOW CAN CAUSE INTERNAL ELECTRICAL ARCING RESULTING IN A DAMAGED OR FAILED COMPRESSOR.

Shipping Inspection

Always keep the unit upright; laying the unit on its side or top may cause equipment damage. Shipping damage, and subsequent investigation is the responsibility of the carrier. Verify the model number, specifications, electrical characteristics, and accessories are correct prior to installation. The distributor or manufacturer will not accept claims from dealers for transportation damage or installation of incorrectly shipped units.

Codes & Regulations

This product is designed and manufactured to comply with national codes. Installation in accordance with such codes and/or prevailing local codes/regulations is the responsibility of the installer. The manufacturer assumes no responsibility for equipment installed in violation of any codes or regulations. Rated performance is achieved after 72 hours of operation. Rated performance is delivered at the specified airflow. See outdoor unit specification sheet for split system models or product specification sheet for packaged and light commercial models. Specification sheets can be found at www.goodmanmfg.com for Goodman® brand products or www.amana-hac.com for Amana® brand products. Within either website, please select the residential or commercial products menu and then select the submenu for the type of product to be installed, such as air conditioners or heat pumps, to access a list of product pages that each contain links to that model's specification sheet.

The United States Environmental Protection Agency (EPA) has issued various regulations regarding the introduction and disposal of refrigerants. Failure to follow these regulations may harm the environment and can lead to the imposition of substantial fines. Should you have any questions please contact the local office of the EPA.

ASK ABOUT ENERGY STAR

"IMPORTANT - This product has been designed and manufactured to meet ENERGY STAR® criteria for energy efficiency when matched with appropriate coil components. However, proper refrigerant charge and proper air flow are critical to achieve rated capacity and efficiency. Installation of this product should follow the manufacturer's refrigerant charging and air flow instructions. **Failure to confirm proper charge and air flow may reduce energy efficiency and shorten equipment life.**"

Amana® is a registered trademark of Maytag Corporation or its related companies and is used under license to Goodman Company, L.P., Houston, TX. All rights reserved.

If replacing a condensing unit or air handler, the system must be manufacturer approved and Air Conditioning, Heating and Refrigeration Institute (AHRI) matched. **NOTE:** Installation of unmatched systems is strongly discouraged.

Outdoor units are approved for operation above 55°F in cooling mode. Operation below 55°F requires the use of an approved low ambient kit.

Damage to the unit caused by operating the unit in a structure that is not complete (either as part of new construction or renovation) is not covered by the warranty.

Features

This air conditioner is a part of the ComfortNet™ family of products. It may be installed as part of a "legacy" system using a standard 24 VAC thermostat. However, with the CTK0* ComfortNet thermostat kit, this air conditioner may be installed as part of a digitally communicating system. The ComfortNet system provides enhanced setup features, and enhanced diagnostics. It also reduces the number of thermostat wires to a maximum of four and a minimum of two.

Installation Clearances

Special consideration must be given to location of the condensing unit(s) in regard to structures, obstructions, other units, and any/all other factors that may interfere with air circulation. Where possible, the top of the unit should be completely unobstructed; however, if vertical conditions require placement beneath an obstruction **there should be a minimum of 60 inches between the top of the unit and the obstruction(s).** The specified dimensions meet requirements for air circulation only. Consult all appropriate regulatory codes prior to determining final clearances.

Another important consideration in selecting a location for the unit(s) is the angle to obstructions. Either side adjacent the valves can be placed toward the structure provided the side away from the structure maintains minimum service clearance. Corner installations are strongly discouraged.

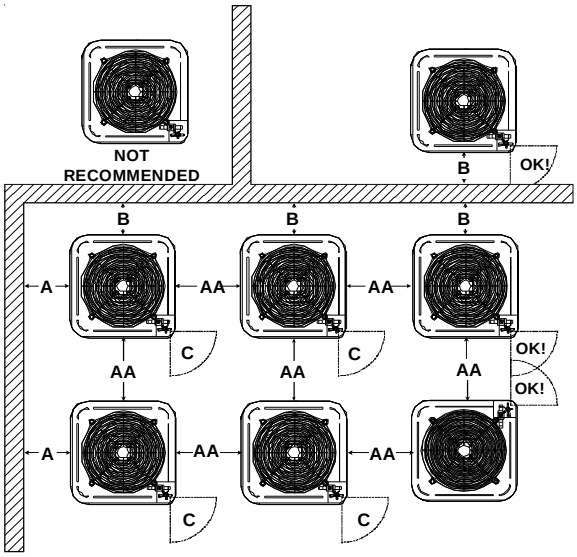

Minimum Airflow Clearance				
Model Type	**A**	**B**	**C**	**AA**
Residential	10"	10"	18"	20"
Light Commercial	12"	12"	18"	24"

This unit can be located at ground floor level or on flat roofs. At ground floor level, the unit must be on a solid, level foundation that will not shift or settle. To reduce the possibility of sound transmission, the foundation slab should not be in contact with or be an integral part of the building foundation. Ensure the foundation is sufficient to support the unit. A concrete slab raised above ground level provides a suitable base.

Rooftop Installations

If it is necessary to install this unit on a roof structure, ensure the roof structure can support the weight and that proper consideration is given to the weather-tight integrity of the roof. Since the unit can vibrate during operation, sound vibration transmission should be considered when installing the unit. Vibration absorbing pads or springs can be installed between the condensing unit legs or frame and the roof mounting assembly to reduce noise vibration.

Safe Refrigerant Handling

While these items will not cover every conceivable situation, they should serve as a useful guide.

⚠ WARNING

TO AVOID POSSIBLE INJURY, EXPLOSION OR DEATH, PRACTICE SAFE HANDLING OF REFRIGERANTS.

⚠ WARNING

REFRIGERANTS ARE HEAVIER THAN AIR. THEY CAN "PUSH OUT" THE OXYGEN IN YOUR LUNGS OR IN ANY ENCLOSED SPACE. TO AVOID POSSIBLE DIFFICULTY IN BREATHING OR DEATH:

- **NEVER PURGE REFRIGERANT INTO AN ENCLOSED ROOM OR SPACE. BY LAW, ALL REFRIGERANTS MUST BE RECLAIMED.**
- **IF AN INDOOR LEAK IS SUSPECTED, THOROUGHLY VENTILATE THE AREA BEFORE BEGINNING WORK.**
- **LIQUID REFRIGERANT CAN BE VERY COLD. TO AVOID POSSIBLE FROSTBITE OR BLINDNESS, AVOID CONTACT AND WEAR GLOVES AND GOGGLES. IF LIQUID REFRIGERANT DOES CONTACT YOUR SKIN OR EYES, SEEK MEDICAL HELP IMMEDIATELY.**
- **ALWAYS FOLLOW EPA REGULATIONS. NEVER BURN REFRIGERANT, AS POISONOUS GAS WILL BE PRODUCED.**

⚠ WARNING

TO AVOID POSSIBLE EXPLOSION, USE ONLY RETURNABLE (NOT DISPOSABLE) SERVICE CYLINDERS WHEN REMOVING REFRIGERANT FROM A SYSTEM.

- **ENSURE THE CYLINDER IS FREE OF DAMAGE WHICH COULD LEAD TO A LEAK OR EXPLOSION.**
- **ENSURE THE HYDROSTATIC TEST DATE DOES NOT EXCEED 5 YEARS.**
- **ENSURE THE PRESSURE RATING MEETS OR EXCEEDS 400 PSIG.**

WHEN IN DOUBT, DO NOT USE CYLINDER.

⚠ WARNING

TO AVOID POSSIBLE EXPLOSION:

- **NEVER APPLY FLAME OR STEAM TO A REFRIGERANT CYLINDER. IF YOU MUST HEAT A CYLINDER FOR FASTER CHARGING, PARTIALLY IMMERSE IT IN WARM WATER.**
- **NEVER FILL A CYLINDER MORE THAN 80% FULL OF LIQUID REFRIGERANT.**
- **NEVER ADD ANYTHING OTHER THAN R-22 TO AN R-22 CYLINDER OR R-410A TO AN R-410A CYLINDER. THE SERVICE EQUIPMENT USED MUST BE LISTED OR CERTIFIED FOR THE TYPE OF REFRIGERANT USED.**
- **STORE CYLINDERS IN A COOL, DRY PLACE. NEVER USE A CYLINDER AS A PLATFORM OR A ROLLER.**

REFRIGERANT LINES

⚠ CAUTION

THE COMPRESSOR POE OIL FOR R-410A UNITS IS EXTREMELY SUSCEPTIBLE TO MOISTURE ABSORPTION AND COULD CAUSE COMPRESSOR FAILURE. DO NOT LEAVE SYSTEM OPEN TO ATMOSPHERE ANY LONGER THAN NECESSARY FOR INSTALLATION.

Use only refrigerant grade (dehydrated and sealed) copper tubing to connect the condensing unit with the indoor evaporator. After cutting the tubing, install plugs to keep refrigerant tubing clean and dry prior to and during installation. Tubing should always be cut square keeping ends round and free from burrs. Clean the tubing to prevent contamination.

Do NOT let refrigerant lines come in direct contact with plumbing, ductwork, floor joists, wall studs, floors, and walls. When running refrigerant lines through a foundation or wall, openings should allow for sound and vibration absorbing material to be placed or installed between tubing and foundation. Any gap between foundation or wall and refrigerant lines should be filled with a pliable silicon-based caulk, RTV or a vibration damping material. Avoid suspending refrigerant tubing from joists and studs with rigid wire or straps that would come in contact with the tubing. Use an insulated or suspension type hanger. Keep both lines separate and always insulate the suction line.

These sizes are suitable for line lengths of 79 feet or less. If a run of more than fifty feet is required, refer to Remote Cooling Service Manual, or TP-106 Long Line Set Application R-22, or TP-107 Long Line Set Application R-410A or contact your distributor for assistance.

Insulation is necessary to prevent condensation from forming and dropping from the suction line. Armflex (or satisfactory equivalent) with 3/8" min. wall thickness is recommended. In severe conditions (hot, high humidity areas) 1/2" insulation may be required. Insulation must be installed in a manner which protects tubing from damage and contamination.

Where possible, drain as much residual compressor oil from existing systems, lines, and traps; pay close attention to low areas where oil may collect. NOTE: If changing refrigerant types, ensure the indoor coil and metering device is compatible with the type of refrigerant being used; otherwise, the indoor coil must be replaced.

RECOMMENDED INTERCONNECTING TUBING (Ft)						
Cond Unit Tons	0-24		25-49		50-79*	
	Line Diameter (In. OD)					
	Suct	Liq	Suct	Liq	Suct	Liq
1 1/2	5/8	1/4	3/4	3/8	3/4	3/8
2	5/8	1/4	3/4	3/8	3/4	3/8
2 1/2	5/8	1/4	3/4	3/8	7/8	3/8
3	3/4	3/8	7/8	3/8	1 1/8	3/8
3 1/2	7/8	3/8	1 1/8	3/8	1 1/8	3/8
4	7/8	3/8	1 1/8	3/8	1 1/8	3/8
5	7/8	3/8	1 1/8	3/8	1 1/8	3/8

* Lines greater than 79 feet in length or vertical elevation changes more than 50 feet **refer to the Remote Cooling Service Manual or contact your distributor for assistance.**

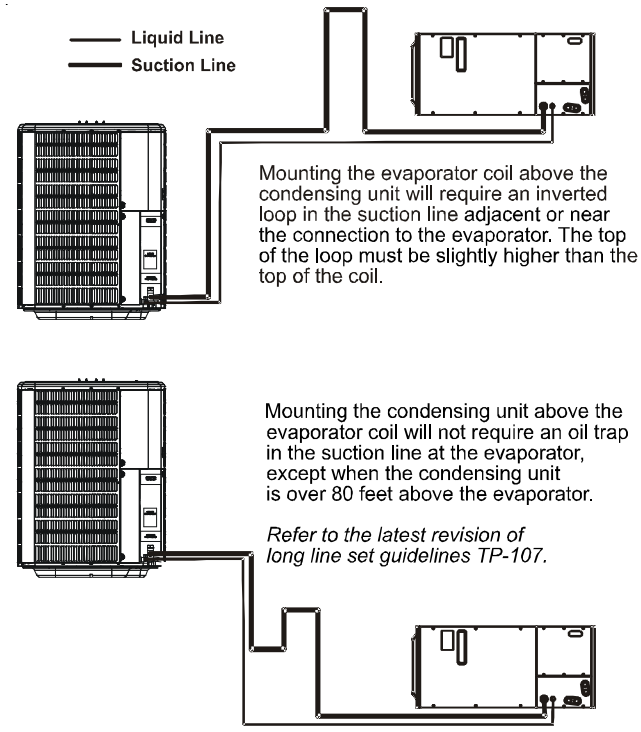

BURYING REFRIGERANT LINES

If burying refrigerant lines can not be avoided, use the following checklist.

1. Insulate liquid and suction lines separately.
2. Enclose all underground portions of the refrigerant lines in waterproof material (conduit or pipe) sealing the ends where tubing enters/exits the enclosure.
3. If the lines must pass under or through a concrete slab, ensure lines are adequately protected and sealed.

Refrigerant Line Connections

IMPORTANT

To avoid overheating the service valve, TXV valve, or filter drier while brazing, wrap the component with a wet rag, or use a thermal heat trap compound. Be sure to follow the manufacturer's instruction when using the heat trap compound. Note: Remove Schrader valves from service valves before brazing tubes to the valves. Use a brazing alloy of 2% minimum silver content. Do not use flux.

Torch heat required to braze tubes of various sizes is proportional to the size of the tube. Tubes of smaller size require less heat to bring the tube to brazing temperature before adding brazing alloy. Applying too much heat to any tube can melt the tube. Service personnel must use the appropriate heat level for the size of the tube being brazed. NOTE: The use of a heat shield when brazing is recommended to avoid burning the serial plate or the finish on the unit.

1. The ends of the refrigerant lines must be cut square, deburred, cleaned, and be round and free from nicks or dents. Any other condition increases the chance of a refrigerant leak.
2. "Sweep" the refrigerant line with nitrogen or inert gas during brazing to prevent the formation of copper-oxide inside the refrigerant lines. The POE oils used in R-410A applications will clean any copper-oxide present from the inside of the refrigerant lines and spread it throughout the system. This may cause a blockage or failure of the metering device.
3. After brazing, quench the joints with water or a wet cloth to prevent overheating of the service valve.
4. Ensure the filter drier paint finish is intact after brazing. If the paint of the steel filter drier has been burned or chipped, repaint or treat with a rust preventative. This is especially important on suction line filter driers which are continually wet when the unit is operating.

NOTE: Be careful not to kink or dent refrigerant lines. Kinked or dented lines will cause poor performance or compressor damage.

Do NOT make final refrigerant line connection until plugs are removed from refrigerant tubing.

NOTE: Before brazing, verify indoor piston size by checking the piston kit chart packaged with indoor unit.

Leak Testing (Nitrogen or Nitrogen-Traced)

⚠ WARNING

TO AVOID THE RISK OF FIRE OR EXPLOSION, NEVER USE OXYGEN, HIGH PRESSURE AIR OR FLAMMABLE GASES FOR LEAK TESTING OF A REFRIGERATION SYSTEM.

⚠ WARNING

TO AVOID POSSIBLE EXPLOSION, THE LINE FROM THE NITROGEN CYLINDER MUST INCLUDE A PRESSURE REGULATOR AND A PRESSURE RELIEF VALVE. THE PRESSURE RELIEF VALVE MUST BE SET TO OPEN AT NO MORE THAN 150 PSIG.

Pressure test the system using dry nitrogen and soapy water to locate leaks. If you wish to use a leak detector, charge the system to 10 psi using the appropriate refrigerant then use nitrogen to finish charging the system to working pressure then apply the detector to suspect areas. If leaks are found, repair them. After repair, repeat the pressure test. If no leaks exist, proceed to system evacuation.

System Evacuation

Condensing unit liquid and suction valves are closed to contain the charge within the unit. The unit is shipped with the valve stems closed and caps installed. **Do not open valves until the system is evacuated.**

⚠ WARNING

REFRIGERANT UNDER PRESSURE!

FAILURE TO FOLLOW PROPER PROCEDURES MAY CAUSE PROPERTY DAMAGE, PERSONAL INJURY OR DEATH.

NOTE: Scroll compressors should never be used to evacuate or pump down a heat pump or air conditioning system.

⚠ CAUTION

PROLONGED OPERATION AT SUCTION PRESSURES LESS THAN 20 PSIG FOR MORE THAN 5 SECONDS WILL RESULT IN OVERHEATING OF THE SCROLLS AND PERMANENT DAMAGE TO THE SCROLL TIPS, DRIVE BEARINGS AND INTERNAL SEAL.

1. Connect the vacuum pump with 250 micron capability to the service valves.
2. Evacuate the system to 250 microns or less using suction **and** liquid service valves. Using both valves is necessary as some compressors create a mechanical seal separating the sides of the system.
3. Close pump valve and hold vacuum for 10 minutes. Typically pressure will rise during this period.

- If the pressure rises to 1000 microns or less and remains steady the system is considered leak-free; proceed to startup.
- If pressure rises above 1000 microns but holds steady below 2000 microns, moisture and/or noncondensibles may be present or the system may have a small leak. Return to step 2: If the same result is encountered check for leaks as previously indicated and repair as necessary then repeat evacuation.
- If pressure rises above 2000 microns, a leak is present. Check for leaks as previously indicated and repair as necessary then repeat evacuation.

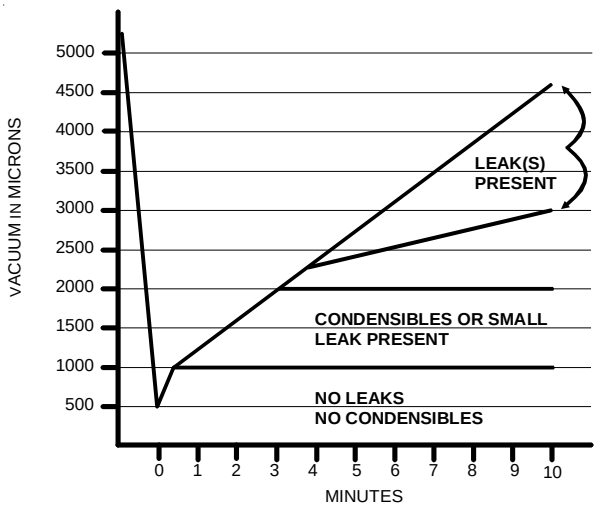

Electrical Connections

⚠ WARNING

HIGH VOLTAGE!

Disconnect ALL power before servicing. Multiple power sources may be present. Failure to do so may cause property damage, personal injury or death due to electric shock. Wiring must conform with NEC or CEC and all local codes. Undersized wires could cause poor equipment performance, equipment damage or fire.

⚠ WARNING

To avoid the risk of fire or equipment damage, use copper conductors.

NOTICE

Units with reciprocating compressors and non-bleed TXV's require a Hard Start Kit.

The condensing unit rating plate lists pertinent electrical data necessary for proper electrical service and overcurrent protection. Wires should be sized to limit voltage drop to 2% (max.) from the main breaker or fuse panel to the condensing unit. Consult the NEC, CEC, and all local codes to determine the correct wire gauge and length.

Local codes often require a disconnect switch located near the unit; do not install the switch on the unit. Refer to the installation instructions supplied with the indoor furnace/air handler for specific wiring connections and indoor unit configuration. Likewise, consult the instructions packaged with the thermostat for mounting and location information.

Overcurrent Protection

The following overcurrent protection devices are approved for use.

- Time delay fuses
- HACR type circuit breakers

These devices have sufficient time delay to permit the motor-compressor to start and accelerate its load.

High Voltage Connections

Route power supply and ground wires through the high voltage port and terminate in accordance with the wiring diagram provided inside the control panel cover.

Low Voltage Connections

Condensing unit control wiring requires a nominal 24 VAC (+/- 6 VAC), 60 Hz, minimum 25 VA service from either the indoor or optional outdoor transformer. Low voltage wiring for the condensing units depends on the thermostat used. The unit is designed to work as part of a fully communicating HVAC system utilizing the ComfortNet™, CTK0* thermostat, ComfortNet compatible indoor unit, and up to four wires. The unit also has legacy 24 VAC inputs to support non-communicating systems. Route control wires through the low voltage port and terminate in accordance with the wiring diagram provided inside the control panel cover.

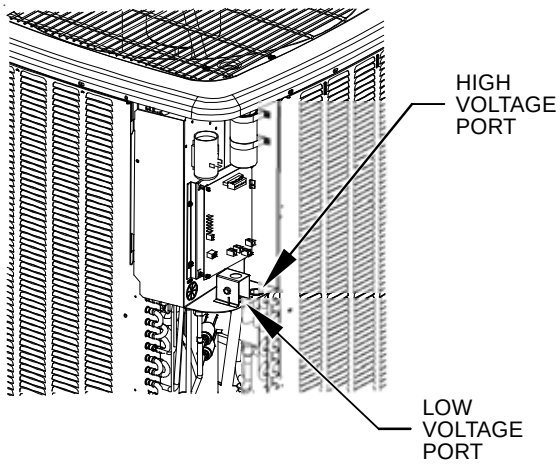

Voltage Ports

NOTE: If the condensing unit is wired in the communicating mode together with the compatible communicating indoor unit and thermostat, then the communicating thermostat is able to search and identify the condensing unit when power is applied to the system. Refer to the Installation Manual of the communicating thermostat for more information.

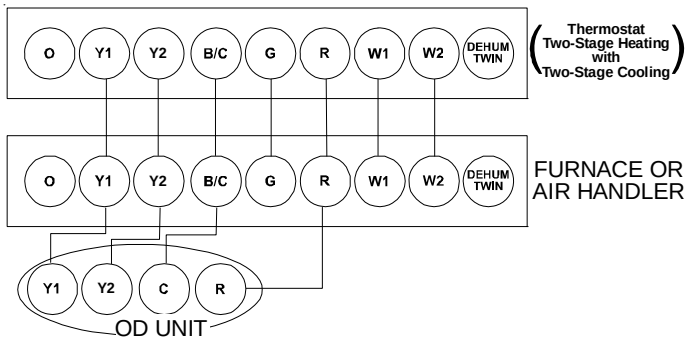

Two-Stage Non-Communicating Thermostat Low Voltage Wire Connection (legacy mode)

System Start Up

CAUTION

POSSIBLE REFRIGERANT LEAK!

TO AVOID A POSSIBLE REFRIGERANT LEAK, OPEN THE SERVICE VALVES UNTIL THE TOP OF THE STEM IS 1/8" FROM THE RETAINER.

NOTE: Power must be supplied to the 18 SEER outdoor units containing ECM motors before the power is applied to the indoor unit. Sending a low voltage signal without high voltage power present at the outdoor unit can cause malfunction of the control module on the ECM motor.

Adequate refrigerant charge for the matching HSVTC evaporator coil and 15 feet of lineset is supplied with the condensing unit. If using evaporator coils other than HSVTC coil it maybe necessary to add or remove refrigerant to attain proper charge. If line set exceeds 15 feet in length, refrigerant should be added at .6 ounces per foot of liquid line.

NOTE: Charge should always be checked using superheat when using a piston and subcooling when using TXV equipped indoor coil to verify proper charge.

Open the suction service valve first! If the liquid service valve is opened first, oil from the compressor may be drawn into the indoor coil TXV, restricting refrigerant flow and affecting operation of the system.

When opening valves with retainers, open each valve only until the top of the stem is 1/8" from the retainer. To avoid loss of refrigerant, DO NOT apply pressure to the retainer. When opening valves without a retainer remove service valve cap and insert a hex wrench into the valve stem and back out the stem by turning the hex wrench counterclockwise. Open the valve until it contacts the rolled lip of the valve body.

NOTE: These are not back-seating valves. It is not necessary to force the stem tightly against the rolled lip.

After the refrigerant charge has bled into the system, open the liquid service valve. The service valve cap is the secondary seal for the valves and must be properly tightened to prevent leaks. Make sure cap is clean and apply refrigerant oil to threads and sealing surface on inside of cap. Tighten cap finger-tight and then tighten additional 1/6 of a turn (1 wrench flat) to properly seat the sealing surfaces.

Do not introduce liquid refrigerant from the cylinder into the crankcase of the compressor as this may damage the compressor.

1. Break vacuum by fully opening liquid and suction base valves.
2. Set thermostat to call for cooling. Check indoor and outdoor fan operation and allow system to stabilize for 10 minutes for fixed orifices and 20 minutes for expansion valves.

Charge Verification

WARNING

REFRIGERANT UNDER PRESSURE!

- **DO NOT OVERCHARGE SYSTEM WITH REFRIGERANT.**
- **DO NOT OPERATE UNIT IN A VACUUM OR AT NEGATIVE PRESSURE.**

FAILURE TO FOLLOW PROPER PROCEDURES MAY CAUSE PROPERTY DAMAGE, PERSONAL INJURY OR DEATH.

CAUTION

USE REFRIGERANT CERTIFIED TO AHRI STANDARDS. USED REFRIGERANT MAY CAUSE COMPRESSOR DAMAGE, AND IS NOT COVERED UNDER THE WARRANTY. MOST PORTABLE MACHINES CANNOT CLEAN USED REFRIGERANT TO MEET AHRI STANDARDS.

NOTICE

VIOLATION OF EPA REGULATIONS MAY RESULT IN FINES OR OTHER PENALTIES.

CAUTION

DAMAGE TO THE UNIT CAUSED BY OPERATING THE COMPRESSOR WITH THE SUCTION VALVE CLOSED IS NOT COVERED UNDER THE WARRANTY AND MAY CAUSE SERIOUS COMPRESSOR DAMAGE.

Final Charge Adjustment

The outdoor temperature must be 60°F or higher. Set the room thermostat to COOL, fan switch to AUTO, and set the temperature control well below room temperature.

After system has stabilized per startup instructions, check subcooling and superheat as detailed in the following section.

CAUTION

TO PREVENT PERSONAL INJURY, CAREFULLY CONNECT AND DISCONNECT MANIFOLD GAUGE HOSES. ESCAPING LIQUID REFRIGERANT CAN CAUSE BURNS. DO NOT VENT REFRIGERANT INTO THE ATMOSPHERE. RECOVER ALL REFRIGERANT DURING SYSTEM REPAIR AND BEFORE FINAL UNIT DISPOSAL.

Expansion Valve System

NOTE: Units matched with indoor coils equipped with non-adjustable TXV should be charged by subcooling only.

Run the remote on low stage cooling for 10 minutes until refrigerant pressures stabilize. Use the following guidelines and methods to check unit operation and ensure that the refrigerant charge is within limits. Charge the unit on low stage.

1. Purge gauge lines. Connect service gauge manifold to base-valve service ports.
2. Temporarily install a thermometer on the liquid line at the liquid line service valve and 4-6" from the compressor on the suction line. Ensure the thermometer makes adequate contact and is insulated for best possible readings. Use liquid line temperature to determine sub-cooling and vapor temperature to determine superheat.
3. Check subcooling and superheat. Systems with TXV application should have a subcooling of 6°F +/- 1°F and superheat of 8°F +/- 1°F.

   a. If subcooling and superheat are low, **adjust** TXV to 8°F +/- 1°F to 9 ºF superheat, then check subcooling.

      NOTE: To adjust superheat, turn the valve stem clockwise to increase and counter clockwise to decrease.

   b. If subcooling is low and superheat is high, **add** charge to raise subcooling to 6°F +/- 1°F then check superheat.

   c. If subcooling and superheat are high, **adjust** TXV valve to 8°F +/- 1°F superheat, then check subcooling.

   d. If subcooling is high and superheat is low, **adjust** TXV valve to 8°F +/- 1°F superheat and **remove** charge to lower the subcooling to 6°F +/- 1°F.

      NOTE: Do **NOT** adjust the charge based on suction pressure unless there is a gross undercharge.
4. Disconnect manifold set, installation is complete.

NOTE: Check the Schrader ports for leaks and tighten valve cores if necessary. Install caps finger-tight.

SUPERHEAT FORMULA =

SUCT. LINE TEMP. - SAT. SUCT. TEMP.

SATURATED SUCTION PRESSURE TEMPERATURE CHART		
SUCTION PRESSURE	SATURATED SUCTION TEMPERATURE ºF	
PSIG	R-22	R-410A
50	26	1
52	28	3
54	29	4
56	31	6
58	32	7
60	34	8
62	35	10
64	37	11
66	38	13
68	40	14
70	41	15
72	42	16
74	44	17
76	45	19
78	46	20
80	48	21
85	50	24
90	53	26
95	56	29
100	59	31
110	64	36
120	69	41
130	73	45
140	78	49
150	83	53
160	86	56
170	90	60

SATURATED LIQUID PRESSURE TEMPERATURE CHART		
LIQUID PRESSURE	SATURATED LIQUID TEMPERATURE ºF	
PSIG	R-22	R-410A
200	101	70
210	105	73
220	108	76
225	110	78
235	113	80
245	116	83
255	119	85
265	121	88
275	124	90
285	127	92
295	130	95
305	133	97
325	137	101
355	144	108
375	148	112
405	155	118
415	157	119
425	n/a	121
435	n/a	123
445	n/a	125
475	n/a	130
500	n/a	134
525	n/a	138
550	n/a	142
575	n/a	145
600	n/a	149
625	n/a	152

ADDITIONAL NOTES:

1. There are (3) 7-segment LED displays on the PCB. See the *Troubleshooting Tables* at the end of this manual for definitions of the LED status.
2. When system is at Standby mode, press "TEST" push button to turn on both compressor and outdoor fan for five (5) seconds.
3. Press "RECALL" push-button to retrieve the six most recent faults. The control must be in Standby Mode (no thermostat inputs) to use the feature. Depress the push-button for approximately two seconds and less than five seconds. The (3) 7-segment LED displays will then display the six most recent faults beginning with the most recent fault and decrementing to the least recent fault. The faults may be cleared by depressing the button for greater than five seconds. Consecutively repeated faults are displayed a maximum of three times. Refer to the fault code definitions at the end of this manual for more details.
4. "TERM" dipswitch is used for communications bus configuration. Leave the settings to the factory default position.
5. "LEARN" push button is used to reset the communications between the equipment. Used only for troubleshooting purposes.

COMFORTNET™ SYSTEM

OVERVIEW

The ComfortNet system (or CT system) is a system that includes a ComfortNet compatible air handler/furnace/modular blower and air conditioner or heat pump with a CTK0* thermostat. Any other system configurations are considered invalid ComfortNet systems and must be connected as a tradition (or legacy) system. The table below compares the valid CT systems.

CT compatible Air Handler/Furnace/Modular Blower	*CT compatible Air Conditioner*	*Full CT system benefits & features*
CT compatible Air Handler/Furnace/Modular Blower	*CT compatible Heat Pump*	*Full CT system benefits & features*

A ComfortNet heating/air conditioning system differs from a legacy/traditional system in the manner in which the indoor unit, outdoor unit and thermostat interact with one another. In a traditional system, the thermostat sends commands to the indoor and outdoor units via analog 24 VAC signals. It is a one-way communication path in that the indoor and outdoor units typically do not return information to the thermostat.

On the other hand, the indoor unit, outdoor unit, and thermostat comprising a ComfortNet system "communicate" digitally with one another. It is now a two-way communications path. The thermostat still sends commands to the indoor and outdoor units. However, the thermostat may also request and receive information from both the indoor and outdoor units. This information may be displayed on the CT thermostat. The indoor and outdoor units also interact with one another. The outdoor unit may send commands to or request information from the indoor unit. This two-way digital communications between the thermostat and subsystems (indoor/outdoor unit) and between subsystems is the key to unlocking the benefits and features of the ComfortNet system.

Two-way digital communications is accomplished using only two wires. The thermostat and subsystem controls are powered with 24 VAC Thus, a maximum of 4 wires between the equipment and thermostat is all that is required to operate the system.

AIRFLOW CONSIDERATIONS

Airflow demands are managed differently in a fully communicating system than they are in a legacy wired system. The system operating mode (as determined by the thermostat) determines which unit calculates the system airflow demand. If the indoor unit is responsible for determining the airflow demand, it calculates the demand and sends it to the ECM motor. If the outdoor unit or thermostat is responsible for determining the demand, it calculates the demand and transmits the demand along with a fan request to the indoor unit. The indoor unit then sends the demand to the ECM motor. The following table lists the various ComfortNet™ systems, the operating mode, and airflow demand source.

System	System Operating Mode	Airflow Demand Source
Air Conditioner + Air Handler	Cooling	Air Conditioner
	Heating	Air Handler
	Continuous Fan	Thermostat
Air Conditioner + Furnace	Cooling	Air Conditioner
	Heating	Furnace
	Continuous Fan	Thermostat

For example, assume the system is an air conditioner matched with an air handler. With a call for low stage cooling, the air conditioner will calculate the system's low stage cooling airflow demand. The air conditioner will then send a fan request along with the low stage cooling airflow demand to the air handler. Once received, the air handler will send the low stage cooling airflow demand to the ECM motor. The ECM motor then delivers the low stage cooling airflow. The table below lists the nominal high and low stage airflow for the ComfortNet heat pumps.

Model	High	Low
*SXC160241	800	600
*SXC160361	1200	800
*SXC160481	1550	1100
*SXC160601	1800	1400

*SXC180241	800	600
*SXC180361	1250	850
*SXC180481	1750	1210
*SXC180601	1750	1210

Control Wiring

NOTE: Refer to *Electrical Connections - High Voltage Connections* for 208/230 volt line connections to the air conditioner.

NOTE: A removable plug connector is provided with the control to make thermostat wire connections. This plug may be removed, wire connections made to the plug, and replaced. It is strongly recommended that multiple wires into a single terminal be twisted together prior to inserting into the plug connector. Failure to do so may result in intermittent operation.

Typical 18 AWG thermostat wire may be used to wire the system components. However, communications reliability may be improved by using a high quality, shielded, twisted pair cable for the data transmission lines. In either case, 150 feet is the recommended length of wire between indoor unit and outdoor unit, or between indoor unit and thermostat.

Only data lines 1 and 2 are required between the indoor and outdoor units. The included 40VA, 208/230 VAC to 24 VAC transformer must be installed in the outdoor unit to provide 24 VAC power to the outdoor unit's electronic control. See kit instructions for mounting and wiring instructions.

NOTE: Use of a 40VA tramsformer is always recommended with multi-stage equipment. Failure to use the transformer in the outdoor unit could result in over loading of the furnace transformer.

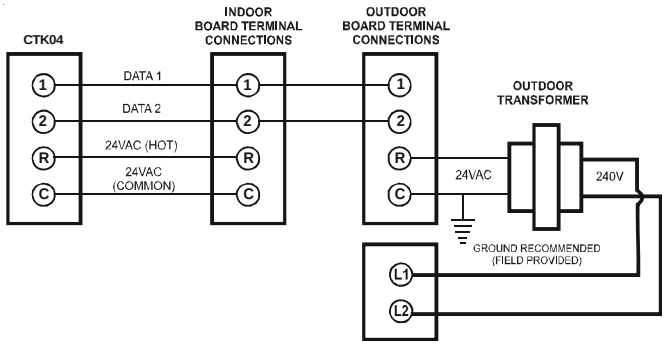

ComfortNet™ System Advanced Features

The ComfortNet system permits access to additional system information, advanced setup features, and advanced diagnostic/troubleshooting features. These advanced features are organized into a menu structure. See thermostat installation manual for directions on how to access the ComfortNet User Menus. See following tables for menu layout.

Diagnostics

Accessing the air conditioner/heat pump's diagnostics menu provides ready access to the last six faults detected by the air conditioner/heat pump. Faults are stored most recent to least recent. Any consecutively repeated fault is stored a maximum of three times. Example: The power supply to the air conditioner/heat pump is continuously below 187 VAC. The control will only store this fault the first three *consecutive* times the fault occurs.

NOTE: It is highly recommended that the fault history be cleared after performing maintenance or servicing the heat pump.

Identification

Model Number, Serial Number and Software Version are displayed within this menu. A model number check will help determine if the equipment shared data is correct for the unit. *If the model number is not correct, even though very rare, a memory card is available to load the proper data.*

Sensors

The outdoor ambient temperature and coil temperature are displayed in the Sensor Menu. This information can be used for troubleshooting purposes.

Cool Set-up

This menu allows for the adjustment of several cooling performance variables. Cool Airflow Trim (range from -10% to 10% in 2% increments), Cool Airflow Profiles, Cool Fan ON Delay, Cool Fan OFF Delay and Dehumidification Select (enable or disable dehumidification) can be adjusted in this menu. See the following images showing the four cooling airflow profiles.

- **Profile A** (default) provides only an OFF delay of one (1) minute at 100% of the cooling demand airflow.

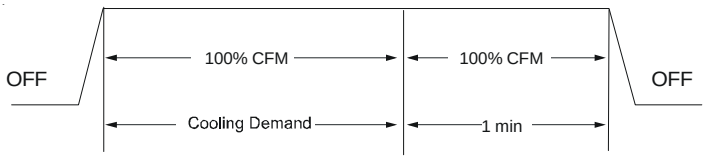

- **Profile B** ramps up to full cooling demand airflow by first stepping up to 50% of the full demand for 30 seconds. The motor then ramps to 100% of the required airflow. A one (1) minute OFF delay at 100% of the cooling airflow.

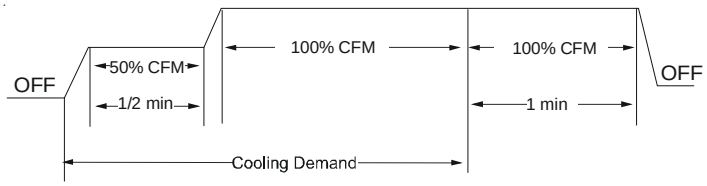

- **Profile C** ramps up to 82% of the full cooling demand airflow and operates there for approximately 7 1/2 minutes. The motor then steps up to the full demand airflow. Profile C also has a one (1) minute 100% OFF delay.

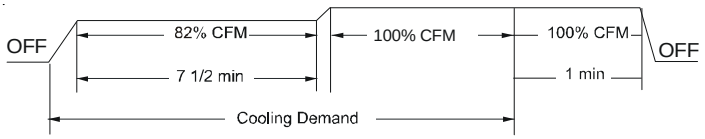

- **Profile D** ramps up to 50% of the demand for 1/2 minute, then ramps to 82% of the full cooling demand airflow and operates there for approximately 7 1/2 minutes. The motor then steps up to the full demand airflow. Profile D has a 1/2 minute at 50% airflow OFF delay.

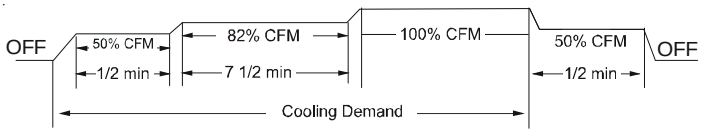

Airflow Tables

STATUS

The current system operational mode and requested indoor CFM is reported in this menu. This information can be used for trouble-shooting purposes.

- Red communications LED - Indicates the status of the network. The table below indicates the LED status and the corresponding potential problem.
- Green receive LED - Indicates network traffic. The table below indicates the LED status and the corresponding potential problem.
- LEARN button - Used to reset the network. Depress the button for approximately 2 seconds to reset the network.

SYSTEM TROUBLESHOOTING

NOTE: Refer to the instructions accompanying the CT compatible indoor air handler/furnace/modular blower unit for troubleshooting information.

Refer to the Troubleshooting Chart at the end of this manual for a listing of possible air conditioner and heat pump error codes, possible causes and corrective actions.

DIAGNOSTICS		
Submenu Item	**Indication/User Modifiable Options**	**Comments**
Fault 1 (FAULT #1)	Most recent AC/HP fault	For display only
Fault 2 (FAULT #2)	Next most recent AC/HP fault	For display only
Fault 3 (FAULT #3)	Next most recent AC/HP fault	For display only
Fault 4 (FAULT #4)	Next most recent AC/HP fault	For display only
Fault 5 (FAULT #5)	Next most recent AC/HP fault	For display only
Fault 6 (FAULT #6)	Least recent AC/HP fault	For display only
Clear Fault History (CLEAR)	NO or YES	Selecting "YES" clears the fault history

NOTE: Consecutively repeated faults are shown a maximum of 3 times

IDENTIFICATION	
Submenu Item	**Indication (for Display Only; not User Modifiable)**
Model Number (MOD NUM)	Displays the air conditioner or heat pump model number
Serial Number (SER NUM)	Displays the air conditioner or heat pump serial number (Optional)
Software (SOFTWARE)	Displays the application software revision

SENSORS		
Submenu Item	**User Modifiable Options**	**Comments**
Outdoor Air Temperature (AIR TMP)	Displays the outdoor air temperature	Sensor may or may not be available on an air conditioner. Check air conditioner instructions for details.

COOL SET-UP		
Submenu Item	**User Modifiable Options**	**Comments**
Cool Airflow Trim (CL TRM)	-10% to +10% in 2% increments, default is 0%	Selects the airflow trim amount; applies to air conditioner only.
Cool Airflow Profile (CL PRFL)	A, B, C, or D, default is A	Selects the airflow profile; applies to air conditioner only.
Cool ON Delay (CL ON)	5, 10, 20, or 30 seconds, default is 5 seconds	Selects the indoor blower ON delay; applies to air conditioner only.
Cool OFF Delay (CL OFF)	30, 60, 90, or 120 seconds, default is 30 seconds	Selects the indoor blower OFF delay; applies to air conditioner only.
Dehumidification Select (DEHUM)	ON or OFF (default is OFF)	Selecting "OFF" disables dehumidification; selecting "ON" enables dehumidification; applies to air conditioner only.

STATUS	
Submenu Item	**Indication (for Display Only; not User Modifiable)**
Mode (MODE)	Displays the current air conditioner operating mode
CFM (CFM	Displays the airflow for the current operating mode

NETWORK TROUBLESHOOTING

Verify that the bus TERM dipswitches are in the ON position.

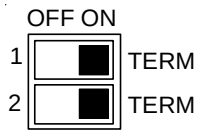

The ComfortNet™ system is a fully communicating system which operates over a communicating network. Occasionally the need to troubleshoot the network may arise. The integrated control module has some on-board tools that may be used to troubleshoot the network. These tools are: red communications LED, green receive (Rx) LED, and learn button.

- Red communications LED - Indicates the status of the network. The table below indicates the LED status and the corresponding potential problem.
- Green receive LED - Indicates network traffic. The table below indicates the LED status and the corresponding potential problem.
- LEARN button - Used to reset the network. Depress the button for approximately 2 seconds to reset the network.

SYSTEM TROUBLESHOOTING

NOTE: Refer to the instructions accompanying the CT compatible indoor air handler/furnace/modular blower unit for troubleshooting information.

Refer to the Troubleshooting Chart at the end of this manual for a listing of possible air conditioner and heat pump error codes, possible causes and corrective actions.

COMMUNICATIONS TROUBLESHOOTING CHART

LED	LED Status	Indication	Possible Causes	Corrective Action(s)	Notes & Cautions
Red Communications LED	Off	• Normal condition	• None	• None	• None
	1 Flash	• Communications Failure	• Communications Failure	• Depress Learn Button	• Depress once quickly for a power-up reset • Depress and hold for 2 seconds for an out-of-box reset
	2 Flashes	• Out-of-box reset	• Control power up • Learn button depressed	• None	• None
Green Receive LED	Off	• No power • Communications error	• No power to furnace • Open fuse • Communications error	• Check fuses and circuit breakers; replace/reset • Replace blown fuse • Check for shorts in low voltage wiring in furnace/system • Reset network by depressing learn button • Check data 1/ data 2 voltages	• Turn power OFF prior to repair
	1 Steady Flash	• No network found	• Broken/ disconnected data wire(s) • Furnace is installed as a legacy/ traditional system	• Check communications wiring (data 1/ data 2 wires) • Check wire connections at terminal block • Verify furnace installation type (legacy/ traditional or communicating) • Check data 1/ data 2 voltages	• Turn power OFF prior to repair • Verify wires at terminal blocks are securely twisted together prior to inserting into terminal block
	Rapid Flashing	• Normal network traffic	• Control is "talking" on network as expected	• None	• None
	On Solid	• Data 1/ Data 2 miss-wire	• Data 1 and data 2 wires reversed at furnace, thermostat, or CT™ compatible outdoor AC/HP • Short between data 1 and data 2 wires • Short between data 1 or data 2 wires and R (24VAC) or C (24VAC common)	• Check communications wiring (data 1/ data 2 wires) • Check wire connections at terminal block • Check data 1/ data 2 voltages	• Turn power OFF prior to repair • Verify wires at terminal blocks are securely twisted together prior to inserting into terminal block

UNIT TROUBLESHOOTING INFORMATION

Complaint	No Cooling							Unsatisfactory Cooling					System Operating Pressures				Test Method Remedy
POSSIBLE CAUSE DOTS IN ANALYSIS GUIDE INDICATE "POSSIBLE CAUSE" SYMPTOM	System will not start	Compressor will not start - fan runs	Compressor and Condenser Fan will not start	Evaporator fan will not start	Condenser fan will not start	Compressor runs - goes off on overload	Compressor cycles on overload	System runs continuously - little cooling	Too cool and then too warm	Not cool enough on warm days	Certain areas to cool others to warm	Compressor is noisy	Low suction pressure	Low head pressure	High suction pressure	High head pressure	
Power Failure	●																Test Voltage
Blown Fuse	●		●	●													Impact Fuse Size & Type
Loose Connection	●			●	●	●											Inspect Connection - Tighten
Shorted or Broken Wires	●	●	●	●	●	●											Test Circuits with Ohmmeter
Open Overload				●	●												Test Continuity of Overloads
Faulty Thermostat	●		●	●					●								Test Continuity of Thermostat and Wiring
Faulty Transformer	●		●														Check Control Circuit with Voltmeter
Shorted or Open Capacitor		●		●	●	●											Test Capacitor
Internal Compressor Overload Open		●															Test Continuity of Overload
Shorted or Grounded Compressor		●				●											Test Motor Windings
Compressor Stuck	●					●											Use Test Cord
Faulty Compressor Contactor	●	●	●			●											Test Continuity of Coil and Contacts
Faulty Fan Relay				●													Test Continuity of Coil and Contacts
Open Control Circuit																	Test Control Circuit with Voltmeter
Low Voltage		●				●	●										Test Voltage
Faulty Evaporator Fan Motor				●									●				Repair or Replace
Shorted or Grounded Fan Motor				●	●											●	Test Motor Windings
Improper Cooling Anticipator									●								Check Resistance of Anticipator
Shortage or Refrigerant							●	●					●	●			Test For Leaks, Add Refrigerant
Restricted Liquid Line							●	●					●	●			Replace Restricted Part
Undersized Liquid Line								●		●			●				Replace Line
Undersized Suction Line													●				Replace Line
Not Enough Air across Indoor Coil								●		●	●		●				Speed Blower, Check Duct Static Pressure
Too Much Air across Indoor Coil															●		Reduce Blower Speed
Overcharge of Refrigerant						●	●					●			●	●	Recover Part of Charge
Noncondensibles							●			●						●	Recover Charge, Evacuate, Recharge
Recirculation of Condensing Air							●			●						●	Remove Obstruction to Air Flow
Infiltration of Outdoor Air								●		●	●						Check Windows, Doors, Vent Fans, Etc.
Improperly Located Thermostat									●								Relocate Thermostat
Air Flow Unbalanced									●		●						Readjust Air Volume Dampers
System Undersized								●		●							Refigure Cooling Load
Broken Internal Parts												●					Replace Compressor
Broken Valves												●					Test Compressor Efficiency
Inefficient Compressor								●						●	●		Test Compressor Efficiency
High Pressure Control Open			●														Reset and Test Control
Unbalanced Power, 3PH		●				●	●										Test Voltage
Wrong Type Expansion Valve						●	●			●							Replace Valve
Expansion Valve Restricted						●	●	●		●			●	●			Replace Valve
Oversized Expansion Valve												●			●		Replace Valve
Undersized Expansion Valve						●	●	●		●			●				Replace Valve
Expansion Valve Bulb Loose												●			●		Tighten Bulb Bracket
Inoperative Expansion Valve						●		●					●				Check Valve Operation
Loose Hold-down Bolts												●					Tighten Bolts

For detailed service information refer to the Remote Condensing Unit Service manual.

NOTICE

UNITS WITH ROTARY OR RECIPROCATING COMPRESSORS AND NON-BLEEDTXV'S REQUIRE A HARD START KIT.

DIAGNOSTIC TABLE

7 SEGMENT LED (DS2)	7 SEGMENT LED (DS1)	DESCRIPTION OF CONDITION
0	n	Standby
0	1	Low Pressure CO Trip
0	1	Low Side Fault
0	2	High Pressure CO Trip
0	2	High Side Fault
0	3	Short Cycling
0	4	Locked Rotor
0	5	Open Circuit
0	6	Open Start Circuit
0	7	Open Run Circuit
0	8	No Line Voltage
0	9	Low Pilot Voltage
8	8	Power Up
A	2	Outdoor Air Temp Sensor Fault
A	3	Outdoor Coil Temp Sensor Fault *
b	0	No Indoor Airflow
b	9	Inadequate Airflow
C	3	Cool Mode Short Cycle Timer
C	1	Low Cool
C	2	High Cool
d	F	Defrost *
d	t	Max Defrost Time *
d	E	Forced Defrost *
d	0	Data not yet on Network
d	1	Invalid Data on Network
d	2	System Mis-Match
d	3	Configuration Mis-Match
d	4	Invalid Memory Card Data
E	E	Board Misoperation
E	5	Open Fuse
F	t	Field Test Mode
H	8	High Line Voltage
L	1	LPCO Lockout (3 Trips)
L	2	HPCO Lockout (3 Trips)
L	6	Open Start Circuit Lockout
L	7	Open Run Circuit Lockout
L	8	Low Line Voltage
P	3	Heat Mode Short Cycle Timer *
P	1	Low Heat *
P	2	High Heat *
P	0	Comp Protector Open

* CODE USED ON HEAT PUMP MODELS ONLY
NOTE 1: DS1, DS2 AND DS3 ARE LABELED ON THE CONTROL ABOVE EACH 7 SEGMENT LED DISPLAY
NOTE 2: 7 SEGMENT LED DISPLAY DS3 IS NOT USED

0140M00407-A

TROUBLESHOOTING INFORMATION: UNITARY DIAGNOSTIC CODES

SYSTEM TROUBLESHOOTING

UNITARY DIAGNOSTIC CODES								
Symptoms of Abnormal Operation (Legacy & ComfortNet™ Thermostat)	**Diagnostic/Status LED Display Codes**			**Fault Description**	**ComfortNet™ Thermostat Only**		**Possible Causes**	**Corrective Actions**	**Notes & Cautions**
	Digit 3	**Digit 2**	**Digit 1**		**Message**	**Code**			
• Integrated control module diagnostic/status LED display shows the indicated code. • ComfortNet™ thermostat displays '---' in the temperature display area.	BLANK	A	2	• Outdoor air temp sensor fault	AIR SENSOR FLT	A2	• Shorted sensor. • Open sensor. • Sensor disconnected. • Sensor out of range.	• Check sensor connection. • Replace open/ shorted sensor.	• Turn power OFF prior to repair. • Replace with correct replacement part.
• Heat pump fails to operate in heating mode. • Integrated control module diagnostic/status LED display shows the indicated code. • ComfortNet™ thermostat displays error message.	BLANK	A	3	• Outdoor coil temp sensor fault	COIL SENSOR FLT	A3	• Shorted sensor • Open sensor. • Sensor. disconnected. • Sensor out of range.	• Check sensor connection. • Replace open/ shorted sensor.	• Turn power OFF prior to repair. • Replace with correct replacement part.
• Air conditioner/heat pump fails to operate. • Integrated control module diagnostic/status LED display shows the indicated code.	BLANK	E	5	• Open fuse	BLOWN FUSE	E5	• Short in low voltage wiring.	• Locate and correct short in low voltage wiring.	• Turn power OFF prior to repair. • Replace fuse with 3-amp automotive type.
• Air conditioner/heat pump fails to operate. • Integrated control module diagnostic/status LED display shows the indicated code.	BLANK	E	E	• Board mis-operation	INTERNAL FAULT	EE	• Compressor relay contacts welded.	• Replace control.	• Turn power OFF prior to repair • Replace with correct replacement part.
• Air conditioner/heat pump fails to operate. • Integrated control module diagnostic/status LED display shows the indicated code. • ComfortNet™ thermostat displays error message.	BLANK	b	0	• Circulator blower motor is not running when it should be running.	MOTOR NOT RUN	b0	• Indoor blower motor problem. • Communications error between indoor and outdoor unit.	• Check indoor blower motor. • Check indoor blower motor wiring. • Check indoor unit control. • Repair/ replace any faulty wiring. • Repair/ replace indoor blower motor or control.	• Turn power OFF prior to repair. • Applies only to fully communicating system using ComfortNet™ thermostat. • Replace with correct replacement part.
• Air conditioner/heat pump operates at reduced performance. • Air conditioner/heat pump operating at low stage when expected to operate at high stage. • Integrated control module diagnostic/status LED display shows the indicated code.	BLANK	b	9	• Airflow is lower than demanded	LOW ID AIRFLOW	b9	• Indoor blower motor problem • Blocked filters. • Restrictive/ undersized ductwork • Indoor/ outdoor unit miss-match.	• Check indoor blower motor. • Check filters; clean/replace as needed. • Check ductwork; resize as needed. • Verify indoor and outdoor units are properly matched.	• Turn power OFF prior to repair. • Applies only to fully communicating system using ComfortNet™ thermostat. • Replace with correct replacement part. See specification sheet(s) for airflow requirements and maximum external static pressure. • See specification sheets for approved system matches.

TROUBLESHOOTING INFORMATION: UNITARY DIAGNOSTIC CODES

UNITARY DIAGNOSTIC CODES								
Symptoms of Abnormal Operation (Legacy & ComfortNet™ Thermostat)	**Diagnostic/Status LED Display Codes**			**Fault Description**	**ComfortNet™ Thermostat Only**		**Possible Causes**	**Corrective Actions**	**Notes & Cautions**
	Digit 3	**Digit 2**	**Digit 1**		**Message**	**Code**			
• Air conditioner/heat pump fails to operate. • Integrated control module diagnostic/status LED display shows the indicated code. • ComfortNet™ thermostat displays error message.	BLANK	d	0	• Data not yet on Network	NO NET DATA	d0	• Air conditioner/ heat pump is wired as part of a communicating system and integrated control module does not contain any shared data.	• Verify system type (communicating or legacy) • Populate shared data using memory card • Wire system as legacy system	• Turn power OFF prior to repair. • Use memory card for your specific model. • Insert memory card BEFORE turning power ON. Memory card may be removed after data is loaded. Turn power OFF before removing memory card. • Error code will be cleared once data is loaded. Applies only to fully communicating system using ComfortNet™ thermostat.
• Air conditioner/heat pump fails to operate. • Integrated control module diagnostic/status LED display shows the indicated code. • ComfortNet™ thermostat displays error message.	BLANK	d	1	• Invalid Data on Network	INVALID DATA	d1	• Air conditioner/ heat pump is wired as part of a communicating system and integrated control module contains invalid shared data or network data is invalid for the integrated control module.	• Verify system type (communicating or legacy). • Populate correct shared data using memory card. • Wire system as legacy system.	• Turn power OFF prior to repair. • Use memory card for your specific model. • Insert memory card BEFORE turning power ON. Memory card may be removed after data is loaded. Turn power OFF before removing memory card. • Error code will be cleared once data is loaded. Applies only to fully communicating system using ComfortNet™ thermostat.
• Air conditioner/heat pump fails to operate. • Air conditioner/heat pump operating at reduced performance. • Air conditioner/heat pump operating at low stage when expected to operate at high stage. • Integrated control module diagnostic/status LED display shows the indicated code. • ComfortNet™ thermostat displays error message.	BLANK	d	2	• System Mis-Match	INVALID SYSTEM	d2	• Air conditioner/ heat pump is wired as part of a communicating system and outdoor unit requires airflow greater than indoor unit's airflow capability. • Shared data is incompatible with the system or missing parameters.	• Verify system type (communicating or legacy). • Verify shared data is correct for your specific model; re-populate data if required. • Wire system as legacy system.	• Turn power OFF prior to repair. • Use memory card for your specific model. • Insert memory card BEFORE turning power ON. Memory card may be removed after data is loaded. Turn power OFF before removing memory card. • Error code will be cleared once data is loaded. Applies only to fully communicating system using ComfortNet™ thermostat.

TROUBLESHOOTING INFORMATION: UNITARY DIAGNOSTIC CODES

UNITARY DIAGNOSTIC CODES								
Symptoms of Abnormal Operation (Legacy & ComfortNet™ Thermostat)	**Diagnostic/Status LED Display Codes**			**Fault Description**	**ComfortNet™ Thermostat Only**		**Possible Causes**	**Corrective Actions**	**Notes & Cautions**
	Digit 3	**Digit 2**	**Digit 1**		**Message**	**Code**			
• Air conditioner/heat pump fails to operate. • Integrated control module diagnostic/status LED display shows the indicated code. • ComfortNet™ thermostat displays error message.	BLANK	d	3	• Configuration Mis-match	INVALID CONFIG	d3	• Shared data sent to integrated control module does not match hardware configuration.	• Verify system type (communicating or legacy). • Verify shared data is correct for your specific model; re-populate data if required. • Wire system as legacy system.	• Turn power OFF prior to repair. • Use memory card for your specific model. • Insert memory card BEFORE turning power ON. Memory card may be removed after data is loaded. Turn power OFF before removing memory card. • Error code will be cleared once data is loaded. Applies only to fully communicating system using ComfortNet™ thermostat.
• Air conditioner/heat pump fails to operate. • Integrated control module diagnostic/status LED display shows the indicated code. • ComfortNet™ thermostat displays error message.	BLANK	d	4	• Invalid Memory Card Data	INVALID MC DATA	d4	• Shared data on memory card has been rejected.	• Verify system type (communicating or legacy). • Verify shared data is correct for your specific model; re-populate data if required. • Wire system as legacy system.	• Turn power OFF prior to repair. • Use memory card for your specific model. • Insert memory card BEFORE turning power ON. Memory card may be removed after data is loaded. Turn power OFF before removing memory card. • Error code will be cleared once data is loaded.
• Very long run time. • Four consecutive compressor protector trips with average run time between trips greater than 3 hours. • Compressor operating at high speed and outdoor fan operating at low speed • Integrated control module diagnostic/status LED display shows the indicated code.	BLANK	0	1	• Low Side Fault	LOW SIDE FAULT	01	• Low refrigerant charge. • Restriction in liquid line. • Indoor blower motor failure. • Indoor thermostat set extremely low.	• Verify refrigerant charge; adjust as needed. • Check for restricted liquid line; repair/ replace as needed. • Check indoor blower motor; repair/replace as needed. • Check indoor thermostat setting.	• Turn power OFF prior to repair. • Fault will clear after 30 consecutive normal cycles. • Fault may be cleared by cycling 24VAC to control. • Replace with correct replacement part(s).
• Compressor and outdoor fan are off. • Thermostat demand is present. • Integrated control module diagnostic/status LED display shows the indicated code.	BLANK	0	1	• Low Pressure Cut Out Trip	LPS OPEN	01	• Low refrigerant charge. • Restriction in liquid line. • Indoor blower motor failure. • Indoor thermostat set extremely low.	• Verify refrigerant charge; adjust as needed. • Check for restricted liquid line; repair/ replace as needed. • Check indoor blower motor; repair/replace as needed. • Check low pressure switch; repair/replace as needed. • Check indoor thermostat setting.	• Turn power OFF prior to repair. • Replace with correct replacement part(s).

TROUBLESHOOTING INFORMATION: UNITARY DIAGNOSTIC CODES

UNITARY DIAGNOSTIC CODES								
Symptoms of Abnormal Operation (Legacy & ComfortNet™ Thermostat)	**Diagnostic/Status LED Display Codes**			**Fault Description**	**ComfortNet™ Thermostat Only**		**Possible Causes**	**Corrective Actions**	**Notes & Cautions**
	Digit 3	**Digit 2**	**Digit 1**		**Message**	**Code**			
• Compressor and outdoor fan are off . • Low pressure switch trip 3 times within same thermostat demand. • Thermostat demand is present. • Integrated control module diagnostic/status LED display shows the indicated code. • ComfortNet™ thermostat displays error message.	BLANK	L	1	• Low Pressure Cut Out Lockout (3 Trips)	LPS LOCKOUT	01	• Low refrigerant charge. • Restriction in liquid line. • Indoor blower motor failure. • Indoor thermostat set extremely low.	• Verify refrigerant charge; adjust as needed. • Check for restricted liquid line; repair/replace as needed. • Check indoor blower motor; repair/replace as needed. • Check low pressure switch; repair/replace as needed. • Check indoor thermostat setting.	• Turn power OFF prior to repair. • Must clear fault by cycling 24VAC to control. • Replace with correct replacement part(s).
• Four consecutive compressor protector trips with average run time between trips greater than 1 minute and less than 15 minutes. • Low pressure and high pressure switches are closed. • Integrated control module diagnostic/status LED display shows the indicated code.	BLANK	0	2	• High Side Fault	HIGH SIDE FAULT	02	• Blocked condenser coil. • Outdoor fan not running.	• Check and clean condenser coil. • Check outdoor fan motor; repair/replace as needed. • Check outdoor fan motor wiring; repair/replace as needed. • Check outdoor fan motor capacitor; replace as needed.	• Turn power OFF prior to repair. • Fault will clear after 4 consecutive normal cycles. • Fault may be cleared by cycling 24VAC to control. • Replace with correct replacement part(s).
• Compressor and outdoor fan are off . • Thermostat demand is present. • Integrated control module diagnostic/status LED display shows the indicated code.	BLANK	0	2	• High Pressure Cut Out Trip	HPS OPEN	02	• Blocked condenser coil. • Outdoor fan not running.	• Check and clean condenser coil. • Check outdoor fan motor; repair/replace as needed. • Check outdoor fan motor wiring; repair/replace as needed. • Check outdoor fan motor capacitor; replace as needed.	• Turn power OFF prior to repair. • Replace with correct replacement part(s).
• Compressor and outdoor fan are off . • Low pressure switch trip 3 times within same thermostat demand. • Thermostat demand is present. • Integrated control module diagnostic/status LED display shows the indicated code. • ComfortNet™ thermostat displays error message.	BLANK	L	2	• High Pressure Cut Out Lockout (3 Trips)	HPS LOCKOUT	02	• Blocked condenser coil. • Outdoor fan not running.	• Check and clean condenser coil. • Check outdoor fan motor; repair/replace as needed. • Check outdoor fan motor wiring; repair/replace as needed. • Check outdoor fan motor capacitor; replace as needed.	• Turn power OFF prior to repair. • Must clear fault by cycling 24VAC to control. • Replace with correct replacement part(s).

TROUBLESHOOTING INFORMATION: UNITARY DIAGNOSTIC CODES

UNITARY DIAGNOSTIC CODES									
Symptoms of Abnormal Operation (Legacy & ComfortNet™ Thermostat)	**Diagnostic/Status LED Display Codes**			**Fault Description**	**ComfortNet™ Thermostat Only**		**Possible Causes**	**Corrective Actions**	**Notes & Cautions**
	Digit 3	**Digit 2**	**Digit 1**		**Message**	**Code**			
• Run time for last 4 cycles is less than 3 minutes each. • Compressor protector has not tripped. • Low pressure and high pressure switches are closed. • Integrated control module diagnostic/status LED display shows the indicated code.	BLANK	0	3	• Short Cycling	CMPR SHRT CYCLE	03	• Intermittent thermostat demand. • Faulty compressor relay.	• Check thermostat and thermostat wiring; repair/ replace as needed. • Check compressor relay operation; replace control as needed.	• Turn power OFF prior to repair. • Fault will clear after 4 consecutive normal cycles. • Fault may be cleared by cycling 24VAC to control. • Replace with correct replacement part(s). • Minimum compressor runt time is changed from 30 seconds to 3 minutes.
• Compressor and outdoor fan are off . • Compressor protector trips four consecutive times. • Average run time between trips is less than 15 seconds. • Integrated control module diagnostic/status LED display shows the indicated code. • ComfortNet™ thermostat displays error message.	BLANK	0	4	• Locked Rotor	LOCKED ROTOR	04	• Compressor bearings are seized. • Failed compressor run capacitor. • Faulty run capacitor wiring. • Low line voltage.	• Check compressor operation; repair/ replace as needed. • Check run capacitor; replace as needed. • Check wiring; repair/replace as needed. • Verify line voltage is within range on rating plate; contact local utility is out of range.	• Turn power OFF prior to repair. • Must clear fault by cycling 24VAC to control. • Replace with correct replacement part(s).
• Compressor and outdoor fan are off f or greater than 4 hours. • Low pressure and high pressure switches are closed. • Integrated control module diagnostic/status LED display shows the indicated code. • ComfortNet™ thermostat displays error message.	BLANK	0	5	• Open Circuit	OPEN CIRCUIT	05	• Power is disconnected. • Failed compressor protector. • Compressor not properly wired to control.	• Check circuit breakers and fuses. • Check wiring to unit; repair/ replace as needed. • Check compressor; repair/replace as needed • Check compressor wiring; repair/ replace as needed.	• Turn power OFF prior to repair. • Fault will clear after 1 normal cycle. • Fault may be cleared by cycling 24VAC to control. • Replace with correct replacement part(s).
• Compressor and outdoor fan are off . • Low pressure and high pressure switches are closed. • Integrated control module diagnostic/status LED display shows the indicated code. • ComfortNet™ thermostat displays error message.	BLANK	0	6	• Open Start Circuit	OPEN START	06	• Compressor start winding is open. • Failed compressor run capacitor. • Faulty run capacitor wiring. • Compressor not properly wired to control. • Faulty compressor wiring.	• Check compressor; repair/replace as needed. • Check run capacitor; replace as needed. • Check wiring; repair/replace as needed.	• Turn power OFF prior to repair. • Fault will clear after 1 normal cycle. • Fault may be cleared by cycling 24VAC to control. • Replace will correct replacement part(s).

TROUBLESHOOTING INFORMATION: UNITARY DIAGNOSTIC CODES

UNITARY DIAGNOSTIC CODES								
Symptoms of Abnormal Operation (Legacy & ComfortNet™ Thermostat)	Diagnostic/Status LED Display Codes			Fault Description	ComfortNet™ Thermostat Only		Possible Causes	Corrective Actions	Notes & Cautions
	Digit 3	Digit 2	Digit 1		Message	Code			
• Compressor and outdoor fan are off . • Low pressure and high pressure switches are closed. • Open start circuit has been detected 4 times with 5 minute delay between each detection. • Integrated control module diagnostic/status LED display shows the indicated code. • ComfortNet™ thermostat displays error message.	BLANK	L	6	• Open Start Circuit Lockout	OPEN START LOCK	06	• Compressor start winding is open. • Failed compressor run capacitor. • Faulty run capacitor wiring. • Compressor not properly wired to control. • Faulty compressor wiring.	• Check compressor; repair/replace as needed. • Check run capacitor; replace as needed. • Check wiring repair/replaced as needed.	• Turn power OFF prior to repair • Must clear fault by cycling 24VAC to control. • Replace with correct replacement part(s).
• Compressor and outdoor fan are off . • Low pressure and high pressure switches are closed. • Integrated control module diagnostic/status LED display shows the indicated code. • ComfortNet™ thermostat displays error message.	BLANK	0	7	• Open Run Circuit	OPEN RUN	07	• Compressor run winding is open. • Compressor not properly wired to control. • Faulty compressor wiring.	• Check compressor; repair/replace as needed. • Check wiring; repair/replace as needed.	• Turn power OFF prior to repair. • Fault will clear after 1 normal cycle. • Fault may be cycling 24VAC to control. • Replace with correct replacement part(s).
• Compressor and outdoor fan are off . • Low pressure and high pressure switches are closed. • Open run circuit has been detected 4 times with 5 minute delay between each detection. • Integrated control module diagnostic/status LED display shows the indicated code. • ComfortNet™ thermostat displays error message.	BLANK	L	7	• Open Run Circuit Lockout	OPEN RUN LOCK	07	• Compressor run winding is open. • Compressor not properly wired to control. • Faulty compressor wiring.	• Check compressor; repair/replace as needed. • Check wiring; repair/replace as needed.	• Turn power OFF prior to repair. • Must clear fault by cycling 24VAC to control. • Replace with correct replacement part(s).
• Air conditioner/heat pump may appear to be operating normally. • Compressor protector may be open (compressor and outdoor fan off). • Integrated control module diagnostic/status LED display shows the indicated code.	BLANK	L	8	• Low Line Voltage	LOW LINE VOLT	08	• Low line voltage.	• Check circuit breakers and fuses. • Verify unit is connected to power supply as specified on rating plate. • Correct low line voltage condition; contact local utility if needed.	• Turn power OFF prior to repair. • Control detects line voltage less than 185 VAC. • Fault will clear if line voltage increases above 185 VAC.

TROUBLESHOOTING INFORMATION: UNITARY DIAGNOSTIC CODES

UNITARY DIAGNOSTIC CODES									
Symptoms of Abnormal Operation (Legacy & ComfortNet™ Thermostat)	**Diagnostic/Status LED Display Codes**			**Fault Description**	**ComfortNet™ Thermostat Only**		**Possible Causes**	**Corrective Actions**	**Notes & Cautions**
	Digit 3	**Digit 2**	**Digit 1**		**Message**	**Code**			
• Air conditioner/heat pump may appear to be operating normally. • Compressor protector may be open (compressor and outdoor fan off). • Integrated control module diagnostic/status LED display shows the indicated code.	BLANK	H	8	• High Line Voltage	HIGH LINE VOLT	08	• High line voltage	• Correct high line voltage condition; contact local utility if needed. • Verify unit is connected to power supply as specified on rating plate.	• Turn power OFF prior to repair. • Control detects line voltage greater than 255 VAC. • Fault will clear if line voltage decreases below 255 VAC.
• Air conditioner/heat pump may appear to be operating normally. • Integrated control module diagnostic/status LED display shows the indicated code.	BLANK	0	9	• Low Pilot Voltage	LOW SECOND VOLT	09	• Control detects secondary voltage less than 18 VAC. • Transformer overloaded. • Low line voltage.	• Check fuse. • Correct low secondary voltage condition. • Check transformer; replace if needed.	• Turn power OFF prior to repair. • Fault will clear if secondary voltage rises above 21VAC. • Replace with correct replacement part(s).
• Compressor is off . • Integrated control module diagnostic/status LED display shows the indicated code.	BLANK	P	0	• Comp Protector Open	Not displayed	Not displayed	• No current through run or start windings. • Compressor run winding is open. • Compressor not properly wired to control. • Faulty compressor wiring. • Failed compressor run capacitor. • Faulty run capacitor wiring.	• Check compressor; repair/replace as needed. • Check wiring; repair/replace as needed. • Check run capacitor; replace as needed.	• Turn power OFF prior to repair. • Fault will clear after 1 normal cycle. • Fault may be cleared by cycling 24VAC to control. • Replace with correct replacement part(s).
• Air conditioner/heat pump may appear to be operating normally. • Compressor protector may be open (compressor and outdoor fan off). • Integrated control module diagnostic/status LED display shows the indicated code.	BLANK	0	8	• No Line Voltage	NO LINE VOLTAGE	08	• No Line Voltage	• Check circuit breaker and fuses. • Verify unit is connected to power supply as specified on rating plate.	• Turn power OFF prior to repair. • Control detects line voltage less than 185 VAC. • Fault will clear if line voltage increases above 185 VAC.

SPLIT SYSTEMS

AIR CONDITIONING AND HEAT PUMP HOMEOWNER'S ROUTINE MAINTENANCE RECOMMENDATIONS

*We strongly recommend a bi-annual maintenance checkup be performed before the heating and cooling seasons begin by a **qualified servicer**.*

Replace or Clean Filter

IMPORTANT NOTE: Never operate unit without a filter installed as dust and lint will build up on internal parts resulting in loss of efficiency, equipment damage and possible fire.

An indoor air filter must be used with your comfort system. A properly maintained filter will keep the indoor coil of your comfort system clean. A dirty coil could cause poor operation and/or severe equipment damage.

Your air filter or filters could be located in your furnace, in a blower unit, or in "filter grilles" in your ceiling or walls. The installer of your air conditioner or heat pump can tell you where your filter(s) are, and how to clean or replace them.

Check your filter(s) at least once a month. When they are dirty, replace or clean as required. Disposable type filters should be replaced. Reusable type filters may be cleaned.

You may want to ask your dealer about high efficiency filters. High efficiency filters are available in both electronic and non-electronic types. These filters can do a better job of catching small airborne particles.

Compressor

The compressor motor is hermetically sealed and does not require additional oiling.

Motors

Indoor and outdoor fan motors are permanently lubricated and do not require additional oiling.

Aluminum Indoor Coil Cleaning (Qualified Servicer Only)

This unit is equipped with an aluminum tube evaporator coil. The safest way to clean the evaporator coil is to simply flush the coil with water. This cleaning practice remains as the recommended cleaning method for both copper tube and aluminum tube residential cooling coils.

An alternate cleaning method is to use one of the products listed in the technical publication **TP-109 (shipped in the literature bag with the unit)** to clean the coils. The cleaners listed are the only agents deemed safe and approved for use to clean round tube aluminum coils. TP-109 is available on the web site in Partner Link > Service Toolkit.

***NOTE:** Ensure coils are rinsed well after use of any chemical cleaners.*

Clean Outside Coil (Qualified Servicer Only)

⚠ WARNING

HIGH VOLTAGE!

DISCONNECT ALL POWER BEFORE SERVICING. MULTIPLE POWER SOURCES MAY BE PRESENT. FAILURE TO DO SO MAY CAUSE PROPERTY DAMAGE, PERSONAL INJURY OR DEATH.

Air must be able to flow through the outdoor unit of your comfort system. Do not construct a fence near the unit or build a deck or patio over the unit without first discussing your plans with your dealer or other qualified servicer. Restricted airflow could lead to poor operation and/or severe equipment damage.

Likewise, it is important to keep the outdoor coil clean. Dirt, leaves, or debris could also restrict the airflow. If cleaning of the outdoor coil becomes necessary, hire a qualified servicer. Inexperienced people could easily puncture the tubing in the coil. Even a small hole in the tubing could eventually cause a large loss of refrigerant. Loss of refrigerant can cause poor operation and/or severe equipment damage.

Do not use a condensing unit cover to "protect" the outdoor unit during the winter, unless you first discuss it with your dealer. Any cover used must include "breathable" fabric to avoid moisture buildup.

Before Calling Your Servicer

- Check the thermostat to confirm that it is properly set.
- Wait 15 minutes. Some devices in the outdoor unit or in programmable thermostats will prevent compressor operation for awhile, and then reset automatically. Also, some power companies will install devices which shut off air conditioners for several minutes on hot days. If you wait several minutes, the unit may begin operation on its own.

⚠ CAUTION

TO AVOID THE RISK OF EQUIPMENT DAMAGE OR FIRE, INSTALL THE SAME AMPERAGE BREAKER OR FUSE AS YOU ARE REPLACING. IF THE CIRCUIT BREAKER OR FUSE SHOULD OPEN AGAIN WITHIN THIRTY DAYS, CONTACT A QUALIFIED SERVICER TO CORRECT THE PROBLEM.
IF YOU REPEATEDLY RESET THE BREAKER OR REPLACE THE FUSE WITHOUT HAVING THE PROBLEM CORRECTED, YOU RUN THE RISK OF SEVERE EQUIPMENT DAMAGE.

- Check the electrical panel for tripped circuit breakers or failed fuses. Reset the circuit breakers or replace fuses as necessary.
- Check the disconnect switch near the indoor furnace or blower to confirm that it is closed.
- Check for obstructions on the outdoor unit . Confirm that it has not been covered on the sides or the top. Remove any obstruction that can be safely removed. If the unit is covered with dirt or debris, call a qualified servicer to clean it.
- Check for blockage of the indoor air inlets and outlets. Confirm that they are open and have not been blocked by objects (rugs, curtains or furniture).
- Check the filter. If it is dirty, clean or replace it.
- Listen for any unusual noise(s), other than normal operating noise, that might be coming from the outdoor unit. If you hear unusual noise(s) coming from the unit, call a qualified servicer.

CUSTOMER FEEDBACK

We are very interested in all product comments.
Please fill out the feedback form on one of the following links:
Goodman® Brand products: (http://www.goodmanmfg.com/about/contact-us).
Amana® Brand products: (http:www.amana-hac.com/about-us/contact-us).
You can also scan the QR code on the right for the product brand you purchased to be directed to the feedback page.

GOODMAN® BRAND AMANA® BRAND

PRODUCT REGISTRATION

Thank you for your recent purchase. Though not required to get the protection of the standard warranty, registering your product is a relatively short process, and entitles you to additional warranty protection, except that failure by California and Quebec residents to register their product does not diminish their warranty rights.
For Product Registration, please register as follows:
Goodman® Brand products: (http://www.goodmanmfg.com/product-registration).
Amana® Brand products: (http:www.amana-hac.com/product-registration).
You can also scan the QR code on the right for the product brand you purchased to be directed to the feedback page.

GOODMAN® BRAND AMANA® BRAND

NOTE: SPECIFICATIONS AND PERFORMANCE DATE LISTED HEREIN ARE SUBJECT TO CHANGE WITHOUT NOTICE.

Quality Makes the Difference!

All of our systems are designed and manufactured with the same high quality standards regardless of size or efficiency. We have designed these units to significantly reduce the most frequent causes of product failure. They are simple to service and forgiving to operate. We use quality materials and components. Finally, every unit is run tested before it leaves the factory. That's why we know. . . **There's No Better Quality."**

Visit our website at www.goodmanmfg.com or www.amana-hac.com for information on:

- Products
- Warranties
- Customer Services
- Parts
- Contractor Programs and Training
- Financing Options

Goodman Manufacturing Company, L.P.
5151 San Felipe, Suite 500 • Houston, TX 77056
© 2014 , 2016 - 2018

Amana is a registered trademark of Maytag Corporation or its related companies and is used under license. All rights reserved.